WEST

Technical Documentation

UHC-326-U-PFN
UHC-326-U-ETC
UHC-326-U-MTC

Universal axis control module (position and pressure control)
with integrated fieldbus interface and SSI sensor interface
Option for flexible function expansion (FlexiMOD)

Electronics
Hydraulics meets
meets Hydraulics
Electronics

CONTENTS

1 General information ... 5
1.1 Order number ... 5
1.2 Scope of supply ... 5
1.3 Accessories ... 5
1.4 Symbols used ... 6
1.5 Legal notice ... 6
1.6 Safety instructions ... 7
2 Characteristics ... 8
2.1 Device description ... 9
3 Use and application ... 10
3.1 Installation instructions ... 10
3.2 Typical system structure ... 11
3.3 Method of operation ... 12
3.4 Commissioning ... 13
4 Technical description ... 15
4.1 Input and output signals ... 15
4.2 LED definitions ... 16
4.2.1 First section (with USB) ... 16
4.2.2 Second section / Fieldbus ... 16
4.3 Block diagram ... 17
4.4 Typical wiring ... 18
4.5 Connection examples ... 18
4.6 Technical data ... 19
5 Parameters ... 21
5.1 Parameter overview ... 21
5.2 Basic Parameters ... 25
5.2.1 MODE (Switching between parameter groups) ... 25
5.3 System Parameters ... 25
5.3.1 LG (Changing the language) ... 25
5.3.2 SENS (Monitoring of the module functions) ... 25
5.3.3 EOUT (Output signal if READY = OFF) ... 26
5.3.4 PASSFB (Password fieldbus) ... 26
5.3.5 HAND (Manual speed) ... 27
5.3.6 MONTIME (Modbus monitoring time) ... 27
5.3.7 POSWIN:S (In-position monitoring) ... 28
5.3.8 POSWIN:D (Dynamic position monitoring) ... 28
5.3.9 PRESSWIN (Pressure window) ... 28
5.4 Input and output configuration ... 29
5.4.1 DISP:IN (Parameter display) ... 29
5.4.2 SYS_RANGE (Working stroke) ... 29
5.4.3 SELECT:X (Position sensor type) ... 29
5.4.4 SIGNAL X (Type of input signal) ... 29
5.4.5 N_RANGE:X (Nominal range of the sensor) ... 30
5.4.6 OFFSET:X (Sensor offset) ... 30
5.4.7 Using of the commands SYS_RANGE, N_RANGE:X and OFFSET:X ... 30
5.4.8 SSI:POL (Signal direction) ... 31
5.4.9 SSI:RES (Signal resolution) ... 31
5.4.10 SSI:BITS (Number of data bits) ... 31
5.4.11 SSI:CODE (Signal coding) ... 31
5.4.12 SSI:ERRBIT (Position of the “out of range” bit) ... 31
5.4.13 PS_RANGE (System pressure) ... 32

5.4.14 N_RANGE X1/X2 (Nominal range of the pressure sensors) ... 32
5.4.15 SIGNAL X1/X2 (Type of input signal) ... 32
5.4.16 SIGNAL:910 (Type of the free analog input) ... 32
5.4.17 SIGNAL:U (Type and polarity of the output signal) ... 33
5.5 Positioning controller ... 34
5.5.1 VMODE (Method of positioning) ... 34
5.5.2 Control structure in SDD mode ... 34
5.5.3 VRAMP (Ramp time for external speed demand) ... 35
5.5.4 A (Acceleration (ramp) time in SDD mode) ... 35
5.5.5 D (Deceleration / braking distance) ... 35
5.5.6 Control structure in NC mode ... 36
5.5.7 ACCEL (Acceleration in NC mode) ... 36
5.5.8 VMAX (Maximum speed in NC mode) ... 36
5.5.9 V0:RES (Scaling of the loop gain) ... 37
5.5.10 V0 (Loop gain setting) ... 37
5.5.11 D:S (Stop - Overtravel) ... 37
5.5.12 PT1 (Transfer function of the controller) ... 38
5.5.13 CTRL (Deceleration characteristics) ... 38
5.5.14 MIN (Deadband compensation) ... 39
5.5.15 MAX (Output scaling) ... 39
5.5.16 TRIGGER (Response threshold for the MIN parameter) ... 39
5.5.17 OFFSET (Valve zero point adjustment) ... 40
5.6 Pressure controller ... 40
5.6.1 Operating modes / controller structure ... 40
5.6.2 Operating direction / Inverting ... 42
5.6.3 Calculation of the control variable XDP ... 42
5.6.4 RA (Command signal ramp time) ... 43
5.6.5 P_OFFSET (pressure offset) ... 43
5.6.6 DZ, DS1, DS2 (Diameters at the cylinder) ... 43
5.6.7 AR (cylinder area ratio) ... 44
5.6.8 KF (Proportionality constant to force) ... 44
5.6.9 C1/C2 (PID control parameters) ... 44
5.7 Advanced functions ... 46
5.7.1 FF (Feed forward in NC mode) ... 46
5.7.2 AFC:P (Gain of the acceleration feedback) ... 46
5.7.3 AFC:T1 (Filter time for acceleration feedback) ... 46
5.7.4 AFC_V0:A/B (Loop gain with active acceleration feedback) ... 47
5.7.5 Drift compensation / high accurate positioning ... 47
5.7.6 DC:AV (Activation value) ... 48
5.7.7 DC:DV (Deactivation value) ... 48
5.7.8 DC:I (Integrator time) ... 48
5.7.9 DC:CR (Integrator limitation) ... 48
5.7.10 MR-Controller ... 49
5.7.11 SELPLUS (additionally transmitted bus signals) ... 49
5.7.12 Limits of the pressure controller ... 50
5.7.13 PROFSTOP (Stop of the profile generator) ... 50
5.7.14 PAR (free Parameters) ... 51
5.7.15 MON (definition of the monitor signals) ... 51
5.7.16 CCSET (free linearisation for the script) ... 51
5.7.17 Free PI controller ... 52
5.7.18 PNVOL (Volume of data exchange) ... 52
5.8 Special commands ... 53

5.8.1 MR (Activation of the MR-Controller) ... 53
5.8.2 Remote control square - wave generator ... 53
5.8.3 DIAG (Query of the last switch-off causes) ... 54
5.8.4 SSI:BITMASK ... 54
5.8.5 NEGW (Release of negative position setpoints) ... 54
5.8.6 ST (Status of the field bus signals) ... 55
5.8.7 DIAGTPS (Profinet - Diagnostic information) ... 55
5.8.8 SETPFNAME (Set the station name) ... 55
5.8.9 MODIP (Communication settings) ... 56
5.9 PROCESS DATA (Monitoring) ... 57
6 Common device functions ... 58
6.1 Failure monitoring ... 58
6.2 Troubleshooting ... 59
6.3 Status Information ... 60
7 Profinet IO RT interface ... 61
7.1 Profinet IO function ... 61
7.2 Profinet Installation guide ... 61
7.3 Profinet name assignment ... 61
7.4 Device data file (GSDML) ... 62
8 EtherCAT IO interface ... 63
8.1 ETHERCAT CoE ... 63
8.2 EtherCAT installation ... 63
8.3 EtherCAT access handling ... 63
8.4 EtherCAT device profiles (ESI) ... 64
8.5 Standard Objects ... 65
9 Modbus/TCP interface ... 66
9.1 Supported function codes ... 66
9.2 Addressing and register numbers ... 67
9.3 Minimum scope of the data transferred ... 67
10 Process data ... 68
10.1 Input from Fieldbus ... 68
10.2 DATA sent to Fieldbus ... 71
11 Parameterization via Fieldbus ... 74
11.1 Procedure ... 74
12 FlexiMod ... 75
12.1 Use Cases ... 75
12.2 Scripting Language ... 76
12.2.1 Basic concept ... 76
12.2.2 Command overview ... 76
12.3 Interface between script and firmware ... 78
12.4 Standard script ... 80
12.5 Programming software ... 80
12.5.1 Connect and read out data ... 80
12.5.2 Load script created offline or enter script with connected module ... 81
12.5.3 Observation mode ... 81
13 Profinet – Driver Blocks for Simatic-Controllers ... 83
14 Notes ... 87

1 General information

1.1 Order number

Universal axis control module (position control and pressure control) with analog output ± 10 V differential output or 4 ... 20 mA output, SSI or analog sensor interface

UHC-326-U-PFN - Profinet interface

UHC-326-U-ETC - EtherCAT interface

UHC-326-U-MTC - Modbus/TCP interface

1.2 Scope of supply

The scope of supply includes the module plus the terminal blocks which are part of the housing.
Interface cables and further parts which may be required should be ordered separately.
This documentation can be downloaded as a PDF file from www.w-e-st.de.

1.3 Accessories

WPC-300 - Start-Up-Tool (downloadable from our homepage – products/software)

Any standard cable with USB-A and USB-B connector can be used as the programming cable.

1.4 Symbols used

General information

Safety-related information

1.5 Legal notice

W.E.St. Elektronik GmbH

Gewerbering 31
D-41372 Niederkrüchten

Tel.: +49 (0)2163 577355-0

Home page: www.w-e-st.de
EMAIL: contact@w-e-st.de

Datum: 11.09.2026

The data and characteristics described herein serve only to describe the product. The user is required to evaluate this data and to check suitability for the particular application. General suitability cannot be inferred from this document. We reserve the right to make technical modifications due to further development of the product described in this manual. The technical information and dimensions are non-binding. No claims may be made based on them.

This document is protected by copyright.

1.6 Safety instructions

Please read this document and the safety instructions carefully. This document will help to define the product area of application and to put it into operation. Additional documents (WPC-300 for the start-up software) and knowledge of the application should be taken into account or be available.
General regulations and laws (depending on the country: e. g. accident prevention and environmental protection) must be complied with.

These modules are designed for hydraulic applications in open or closed-loop control circuits. Uncontrolled movements can be caused by device defects (in the hydraulic module or the components), application errors and electrical faults. Work on the drive or the electronics must only be carried out whilst the equipment is switched off and not under pressure.

This handbook describes the functions and the electrical connections for this electronic assembly. All technical documents which pertain to the system must be complied with when commissioning.

This device may only be connected and put into operation by trained specialist staff. The instruction manual must be read with care. The installation instructions and the commissioning instructions must be followed. Guarantee and liability claims are invalid if the instructions are not complied with and/or in case of incorrect installation or inappropriate use.

CAUTION!
All electronic modules are manufactured to a high quality. Malfunctions due to the failure of components cannot, however, be excluded. Despite extensive testing the same also applies for the software. If these devices are deployed in safety-relevant applications, suitable external measures must be taken to guarantee the necessary safety. The same applies for faults which affect safety. No liability can be assumed for possible damage.

Further instructions

- The module may only be operated in compliance with the national EMC regulations. It is the user's responsibility to adhere to these regulations.
- The device is only intended for use in the commercial sector.
- When not in use the module must be protected from the effects of the weather, contamination and mechanical damage.
- The module may not be used in an explosive environment.
- To ensure adequate cooling the ventilation slots must not be covered.
- The device must be disposed of in accordance with national statutory provisions.

2 Characteristics

This electronic module was developed for controlling the position and/or pressure of a hydraulic axis via the integrated fieldbus interface.

The hydraulic axis can be driven as positioning control with digital stroke measurement (SSI interface) or by analog sensors.

Additionally, an integrated pressure limitation control function for one or two pressure sensors (differential pressure) is implemented. Command signals and actual values are transmitted by a fieldbus communication interface. Feedback are status information and actual values.

Proportional valves with integrated electronics (typically control valves) can be driven by the analogue output.

Internal failure and the system statuses are monitored. The ready output is available as a fieldbus information and parallel as a hardware output.

The parameterization is performed via a USB interface in combination with our PC program WPC-300. Alternatively, defined parameters can be modified via the fieldbus interface.

Typical applications: general positioning drives, fast transport drives, handling systems, speed-controlled axes and presses with positioning and pressure control.

Features

- **Fieldbus for command values, sensor values, control word and status word**
- **SSI- or analog feedback sensors (0… 10 V or 4… 20 mA)**
- **Resolution up to 1 µm (SSI - interface)**
- **Function and data exchange can be customized via Flexi*MOD* script programming.**
- **Speed resolution 0,005 mm/s**
- **Positioning modes are: stroke-dependent deceleration or NC mode with internal profile generator**
- **Profiling of the movement with two positions and two speeds**
- **Alternatively continuous command signal transition**
- **Differential pressure limitation control or direct pressure control**
- **Expanded closed loop control functions:**
  - **P_{T1} filter**
  - **Drift compensation for optimal zero point adjustment**
  - **Accurate positioning by compensation of force depended positioning deviations**
  - **Feed forward to reduce the following error**
  - **Acceleration feedback by measuring the differential pressure (used to improve the dynamic behavior in case of low dynamics drives)**
- **Usable with overlapped proportional valves and with zero lapped control valves**
- **Fault diagnosis and extended function checking**
- **Simplified parameterization with WPC-300 software**

2.1 Device description

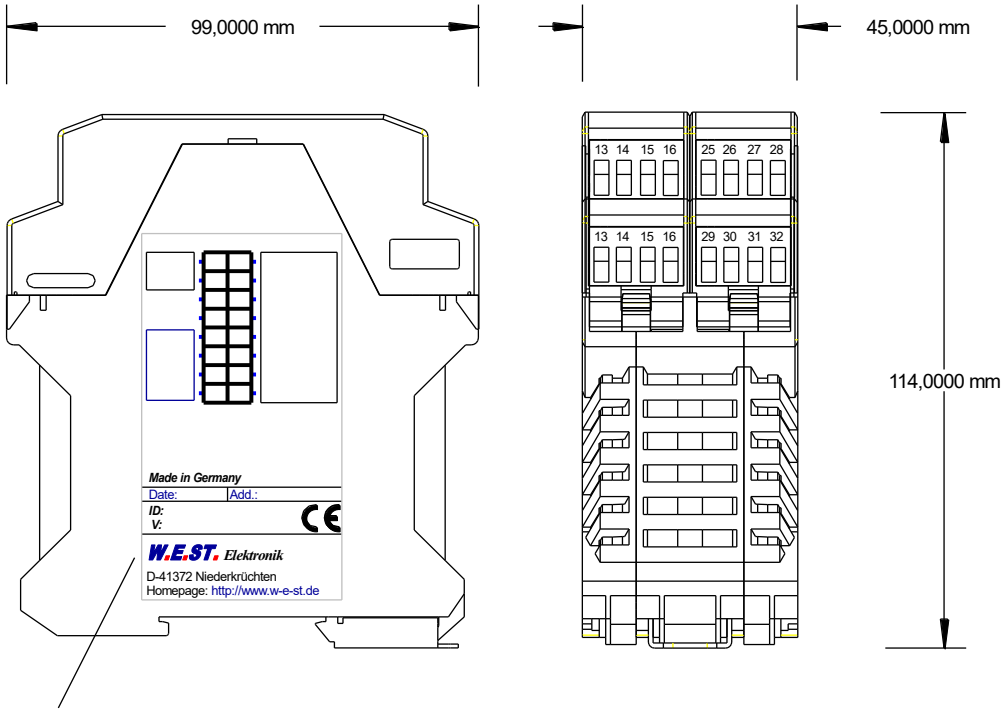

Type plate and terminal pin assignment

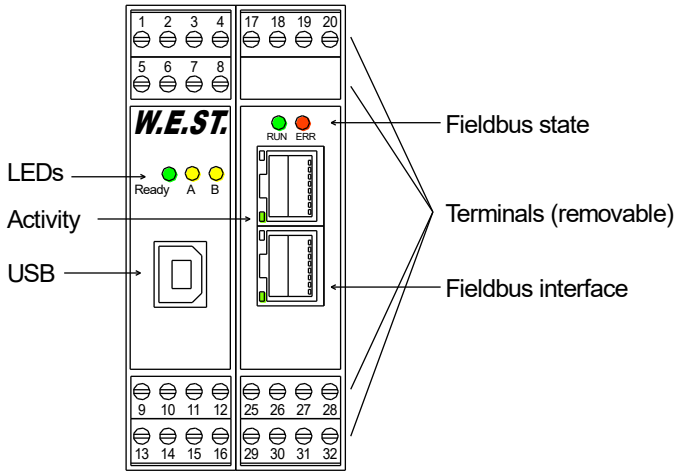

3 Use and application

3.1 Installation instructions

- This module is designed for installation in a shielded EMC housing (control cabinet). All cables which lead outside must be screened; complete screening is required. It is also necessary to avoid strong electro-magnetic interference sources being installed nearby when using our open and closed loop control modules.

- **Typical installation location:** 24 V control signal area (close to PLC)
  The devices must be arranged in the control cabinet so that the power section and the signal section are separate from each other.
  Experience shows that the installation place close to the PLC (24 V area) is most suitable. All digital and analogue inputs and outputs are fitted with filters and surge absorbers in the device.

- The module should be installed and wired in accordance with the documentation bearing in mind EMC principles. If other consumers are operated with the same power supply, a star-shaped ground wiring scheme is recommended. The following points must be observed when wiring:
  - The signal cables must be laid separately from power cables.
  - Analogue signal cables **must be screened**.
  - All other cables must be screened if there are powerful interference sources (frequency converters, power contactors) and cable lengths > 3 m. Inexpensive SMD ferrites can be used with high-frequency radiation.
  - The screening should be connected to PE (PE terminal) as close to the module as possible. The local requirements for screening must be taken into account in all cases. The screening should be connected to at both ends. Equipotential bonding must be provided where there are differences between the connected electrical components.
  - If having longer lengths of cable (> 10 m), the diameters and screening measures should be checked by specialists (e. g. for possible interference, noise sources and voltage drop). Special care is required if using cables of over 40 m in length, and the manufacturer should be consulted if necessary.

- A low-resistance connection between PE and the mounting rail should be provided. Transient interference is transmitted from the module directly to the mounting rail and from there to the local earth.

- Power should be supplied by a regulated power supply unit (typically a PELV system complying with IEC364-4-4, secure low voltage). The low internal resistance of regulated power supplies gives better interference voltage dissipation, which improves the signal quality of high-resolution sensors in particular. Switched inductances (relays and valve coils) which are connected to the same power supply must <u>always</u> be provided with appropriate overvoltage protection directly at the coil.

3.2 Typical system structure

This minimal system consists of the following components:

(*1) Proportional valve with integrated electronics
(*2) Drive (e.g. hydraulic cylinder)
(*3) Sensors for position (SSI or analog) and pressure
(*4) UHC-326 control module
(*5) Interface to PLC

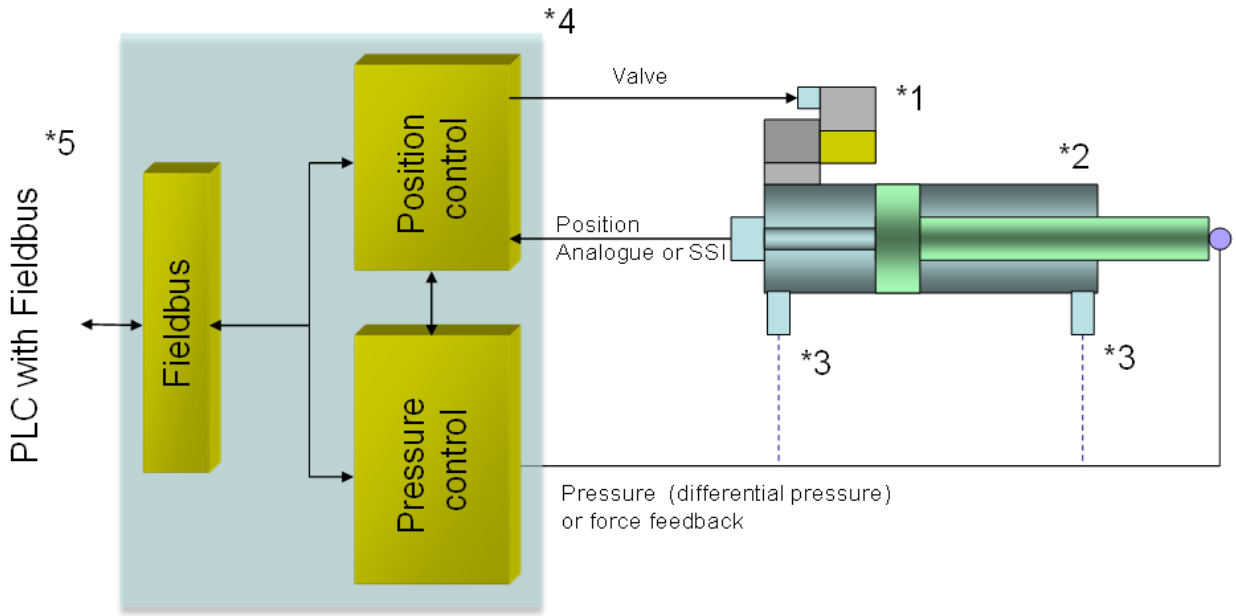

3.3 Method of operation

Positioning control plus pressure control

General information

This module is a combined system of position control and pressure control. The standard communication via fieldbus simplifies the wiring. The UHC-126-U can be used as a universal axis controller for hydraulic drives. Because of a second position and a second velocity, it is optionally possible to drive to target position with the corresponding speed (rapid traverse and creeping speed respectively creeping speed and rapid traverse)

Positioning: Similar to our standard positioning modules, the axis can be used as point to point controller (stroke depended deceleration) as well as in NC mode. With only a few parameters the controller can be optimized, the movement profile is preset via Fieldbus (position and velocity).

Influences on positioning accuracy:

The positioning accuracy is determined by the hydraulic and mechanical conditions. The right choice of valve is therefore a decisive factor. In addition, two mutually contradictory requirements (short position time and high accuracy) must be taken into account when designing the system.
The electronic limitations lie mainly in the resolution of the analogue signals, although a resolution of < 0,01 % only needs to be considered for our modules with long positions. In addition, the linearity of the individual signal points (PLC, sensor and control module) must be taken into account.

It is generally recommended to calculate the static and dynamic behavior of the hydraulic axis. For supporting this, following technical basic data are required:

- minimum natural frequency of the cylinder,
- maximum theoretical speed for extending and retracting,
- valve characteristics (natural frequency, overlapped or zero lapped, hysteresis and the flow gain (flow and pressure drop),
- system pressure, maximum pump flow,
- a description of the general system requirements.

Pressure closed loop control

The pressure control is designed as a pressure limitation control, as required for typical press applications, for example. If the feedback pressure is higher than the command pressure, the pressure controller takes over the control of the axis. This kind of control is typically used in metal forming applications. The behavior of the pressure closed loop control is adjustable by an optimized PID compensator. Two different setups can be selected over the fieldbus. Optionally, the pressure control function can be used without the position controller.

3.4 Commissioning

Step	Task
Installation	Install the device in accordance with the circuit diagram. Ensure it is wired correctly and the signals are well shielded. The device must be installed in a protective housing (control cabinet or similar). The wiring to the fieldbus interface is done by appropriate cables.
Switching on for the first time	Ensure that no unwanted movement is possible in the drive (e. g. switch off the hydraulics). Connect an ammeter and check the current consumed by the device. If it is higher than specified, there is an error in the wiring. Switch the device off immediately and check the wiring.
Setting up communication	Once the power input is correct, the PC (notebook) should be connected to the serial interface. Please see the WPC-300 program documentation for how to set up the communication. Further commissioning and diagnosis are supported by the operating software.
Pre-parameterization	Now set up the following parameters (with reference to the system design and circuit diagrams): - The SYSTEM data, INPUT sensor settings, control parameter and OUTPUT parameters. Pre-parameterization is necessary to minimize the risk of uncontrolled movements. - Reduce the speed limitation to a value which is uncritical for the application.
Fieldbus Communication	By selecting the device driver, the IP address of the device and the configuration file, the communication can now be operated to the device. At the corresponding positions setpoints and control bits can now be sent and actual values and status bits are read back. Read the description of the interface in a separate chapter.
Remote Control	If there is no bus communication available at the beginning of the commissioning, the axis can be operated solely via the WPC program. In the monitor window, the “Remote Control” mode can be activated. Then it is possible to enter a speed value and move the axis using the manual signals or to enter a position set-point and to activate the position controller by setting the “Start” – signal. ***CAUTION!*** WPC will take over complete control in this state. The hardware – enable signal at PIN 8 and the bus interface are inoperable in this case.
Control signal	Check the control signal with a current- or voltmeter. **Voltages**: The differential output (PIN 15 minus PIN16) lies in the range of ± 10 V. **Current**: PIN 15 is used for 4… 20 mA (12 mA for 0 % of the control signal). An alternative output signal (in case of not READY) can be defined by the EOUT command.
Switching on the hydraulics	The hydraulics can now be switched on. Since the module is not yet generating a signal, the drive should be at a standstill or drift slightly (leave its position at a slow speed).
Activating ENABLE	***CAUTION!*** The drive can now leave its position and move to an end position at full speed. Take safety measures to prevent personal injury and damage. Both hardware ENABLE and software ENABLE (over the fieldbus) have to be activated. Outputs and failure processing are active. The drive stays (closed loop controlled) in the current position. If the drive moves to an end position, the polarity is probably wrong.
Speed demand	The speed is sent by the fieldbus. At zero speed, no movement is possible.
Manual (HAND) operation	If START is disabled, the axis can be moved manually with HAND+ or HAND-. After disabling the HAND signal, the axis stops closed loop controlled at the current position. The axis can also be driven without a sensor signal.

Step	Task
Activating START	With the start signal the demand value input is accepted and the axis moves to the target position. If START is disabled, the axis stops in the preset deceleration distance D:S.
Optimize controller	Now optimize the control parameters according to your application and your requirements.

4 Technical description

4.1 Input and output signals

Connection	Supply
PIN 3	Power supply (see technical data)
PIN 4	0 V (GND) connection.
PIN 19	Power supply Fieldbus and SSI-interface (see technical data)
PIN 20	0 V (GND)
Connection	**Analog signals**
PIN 6	Actual pressure (X2), range 0… 10 V or 4… 20 mA, scalable (SIGNAL:X2)
PIN 9 (-) / /10 (+)	Differential input, signal range -10 to 10 V or 0 to 20 mA, for free use in the script
PIN 13	Actual pressure (X1), range 0… 10 V or 4… 20 mA, scalable (SIGNAL:X1)
PIN 14	Actual position (X), range 0… 10 V or 4… 20 mA, scalable (SIGNAL:X)
PIN 11 / PIN 12	0 v (GND) connection for the analogue signals
PIN 15 / 16 PIN 15 / 12	Control output, range: +/- 10 V (differential output) or PIN 15: 4… 12… 20 mA Type of signal and polarity can be selected by the parameter SIGNAL:U.
Connection	**SSI interface**
PIN 25	CLK+ output
PIN 26	CLK- output
PIN 27	DATA+ input
PIN 28	DATA- input
PIN 31	Power supply output 24 V
PIN 32	Power supply output 0 V
Connection	**Digital inputs and outputs**
PIN 8	**Enable input:** Hardware ENABLE (have to be activated together with fieldbus ENABLE)
PIN 5, PIN 7	Digital inputs for free use in the script
Connection	**Digital inputs and outputs**
PIN 1	**READY output:** **ON:** The module is enabled; there are no discernible errors. **OFF:** Enable (PIN 8 or Fieldbus bit) is disabled or an error has been detected (depending on command SENS)
PIN 2	Digital output for free use in the script

4.2 LED definitions

4.2.1 First section (with USB)

LEDs	Description of the LED function
GREEN	Identical to the READY output except for the error indication. **OFF:** No power supply or ENABLE is not activated **ON:** System is ready for operation **Flashing:** Error discovered Only active when SENS = ON
YELLOW A	Identical to the STATUS output. **OFF:** The axis is outside the INPOS window. **ON:** The axis is within the INPOS window.
GREEN + YELLOW A+B	1. **Chasing light (over all LEDs):** The bootloader is active. No normal functions are possible. 2. **All LEDs flash shortly every 6 s:** An internal data error was detected and corrected automatically! The module still works regularly. To acknowledge the error the module has to be cycle powered.
YELLOW A + YELLOW B	**Both yellow LEDs flash alternately every 1 s:** The nonvolatile stored parameters are inconsistent! To acknowledge the error, the data have to be saved with the SAVE command or the corresponding button in the WPC.

4.2.2 Second section / Fieldbus

LEDs Ethernet	Description of the LED function
GREEN at the ports	Green LEDs shows network traffic at the relating port. OFF: No connection available ON: Active network connected Flickering: Existing data traffic (EtherCAT) Flashing: PROFINET participant flash test / Activity (Modbus / TCP)
GREEN	The green RUN LED indicates the status of the central communication processor. OFF: Bus not started Flashing: EtherCAT: Safe Operational / Profinet: Initializing / Modbus/TCP: Receiving Modbus telegrams containing write operations ON: Connected and active
RED	The red ERR LED indicates a faillure state OFF: No Error. Flashing: EtherCAT: No communication ON: Profinet Modbus/TCP: Failure in the data communication

4.3 Block diagram

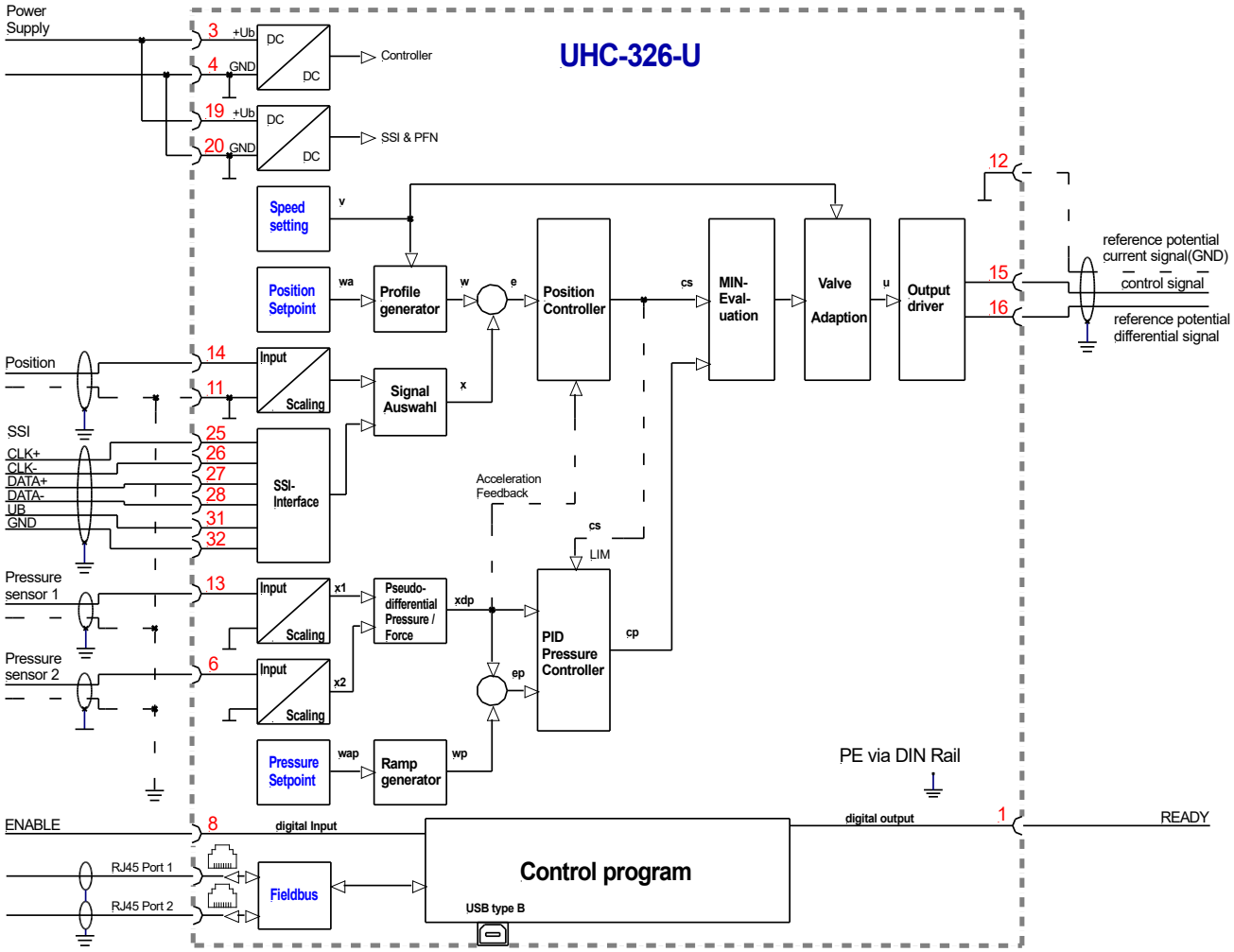

The block diagram shows only the signals that are processed in the standard program. Additional inputs and outputs are available that can only be used via the script (see 4.1), and the function of the signals shown here can be changed there.

4.4 Typical wiring

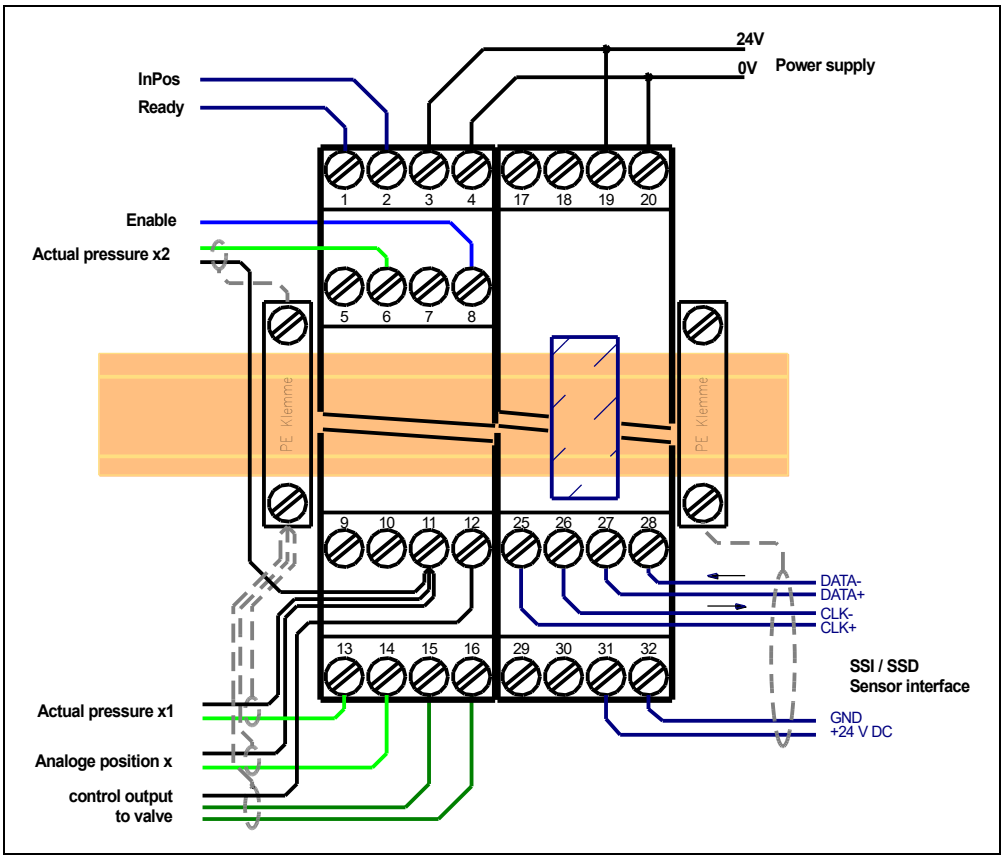

4.5 Connection examples

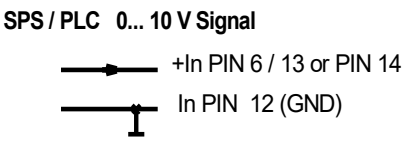

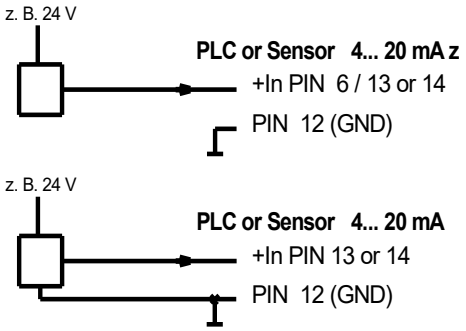

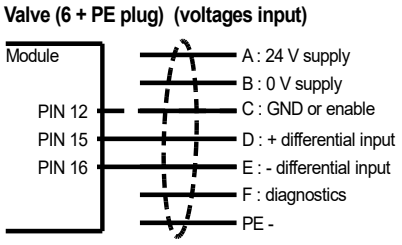

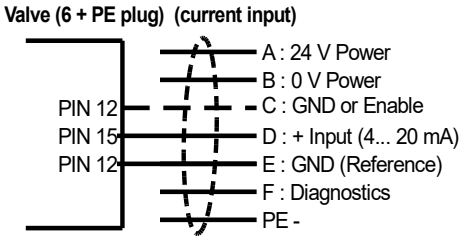

4.6 Technical data

Supply voltage (U_b) Power consumption External protection	**[VDC]** **[W]** **[A]**	24 (±10 %) max. 5.5 without sensor supply 1 medium time lag
Digital inputs OFF ON Input resistance	 **[V]** **[V]** **[kOhm]**	 < 2 > 10 25
Digital outputs OFF ON Maximum output current	 **[V]** **[V]** **[mA]**	 < 2 max. U_b 50
Analogue inputs Voltage Input resistance Signal resolution Current Load Signal resolution	 **[V]** **[kOhm]** **[%]** **[mA]** **[Ohm]** **[%]**	Unipolar 0… 10 min. 25 0.003 incl. Oversampling 4… 20 240 Ohm 0.006 incl. Oversampling
Analogue outputs Voltage Maximum load Current Maximum load Signal resolution	 **[V]** **[mA]** **[mA]** **[Ohm]** **[%]**	 0… 10, +/- 10 differential 10 4… 20 390 0.007
SSI-interface Data rate	 **[kbit/s]**	RS-422 specification 120
Controller sample time	**[ms]**	1
Serial Interface Data rate	**-** **[kBaud]**	USB - virtuel COM Port 9.6… 115.2
Profinet IO Data rate Conformance class Redundancy (optionally usable)	 **[Mbit/s]** **-** **-**	 100 CC-B S2
EtherCat Transmission rate Standard Connections	 **[Mbit/s]** **[IEE]** **-**	 100 802.3 RJ45 in, RJ45 out
Modbus / TCP Data rate Port Address assignment	 **[Mbit/s]** **-** **-**	 100 502 DHCP, fixed IP
Housing Material Flammability class	 **-** **-**	Snap-On Module according EN 50022 Polyamid PA 6.6 V0 (UL94)
Weight	**[kg]**	0.285

Protection class Temperature range Storage temperature Humidity	 **[°C]** **[°C]** **[%]**	IP20 -20… 60 -20… 70 < 95 (non-condensing)
Connections Communication Plug connectors PE Fieldbus	**-**	 USB type B 7 x 4-pole terminal blocks via the DIN mounting rail RJ45 IN OUT
EMC	**-**	EN61000-6-4: 2007 +A1:2011 EN61000-6-2: 2005

5 Parameters

5.1 Parameter overview

The indices specified in this table can be used for parameterization via Fieldbus or in the “SPAR” script command. Please note: In older WPC versions, some numerical values are entered with a decimal point shift, e.g., 100.00% -> entry “10000”. This can be seen from the comment text displayed there, in this case, for example, [0.01%].

Group	Command	Default	Unit	Description	Index [hex.] / Factor [dec.]
Basic parameters					
	MODE	STD	-	Parameter view	
System (MODE = SYSTEM)					
	LG	EN	-	Changing language help texts	
	SENS	ON	-	Malfunction monitor	0x1500
	EOUT	0	%	Output signal if not ready	0x1504 / 100
	PASSFB	0	-	Password for fieldbus parameterization	
	HAND:A HAND:B	33.3 -33.3	% %	Output signal in manual mode	0x1502 / 100 0x1503 / 100
	MONTIME	100	ms	Modbus – monitoring time	
	POSWIN:S POSWIN:D	200 200	µm µm	Method of positioning	0x2001 0x2002
	PRESSWIN	2000	mbar	Ranges of the in-position monitoring	0x2003
Input / Output Signals (MODE = IO_CONF))					
	DISP:IN	SEL	-	Show all parameters or only selected	
Position sensor scaling, system range					
	SYS_RANGE	100	mm	Axis working stroke	0x1501
	SELECT:X	SSI	-	Sensor selection	0x1520
	SIGNAL:X	U0-10		Type of the sensor signal (if the analog input is used)	0x1532
	N_RANGE:X	100	bar	Nominal range	0x1533
	OFFSET:X	0	µm	Offset value	0x2017
SSI position sensor					
	SSI:POL	+	-	Polarity	0x1531
	SSI:RES	1.0	µm	Resolution of the sensor	0x1521 / 100
	SSI:BITS	24	-	Number of data bits	0x1522
	SSI:CODE	GRAY	-	Code	0x1523
	SSI:ERRBIT	0	-	Position of the error bit	0x1524
Pressure sensor scaling, system pressure range					
	PS_RANGE	100	bar	System pressure	0x1553
	SIGNAL:X1	U0-10	-	Type of the sensor	0x1554
	N_RANGE:X1	100	bar	Nominal pressure of the sensor	0x1555
	SIGNAL:X2	U0-10	-	Type of the sensor	0x1556
	N_RANGE:X2	100	bar	Nominal pressure of the sensor	0x1557

Free analog input				
SIGNAL:910	U+-10	-	Analog input type	0x1552
Output				
SIGNAL:U	U+-10	-	Type and polarity of the analog output	0x1582
Position controller (MODE = POSITION)				
Common settings				
VMODE	SDD	-	Selection of positioning method	0x1560
VRAMP	200	ms	Ramp time for the external command speed	0x2006
VMODE = NC				
ACCEL	250	mm/s²	Acceleration in NC mode	0x2003
VMAX	50	mm/s	Maximum speed in NC mode	0x1562
V0:RES	1	-	Can be used to change the resolution	
V0:A **V0:B**	8 8	1/s 1/s	Closed loop gain without acceleration feedback	0x2004 0x2005
VMODE = SDD				
A:A **A:B**	100 100	ms ms	Acceleration (ramp times) in SDD mode	0x2007 0x2008
D:A **D:B**	25 25	mm mm	Deceleration stroke in SDD mode	0x2009 0x2010
Further settings, output adaption				
D:S	10	mm	STOP - Overtravel	0x1561
PT1	0	ms	PT1 time constant	0x2011
CTRL	SQRT1	-	Control characteristics	0x2012
MIN:A **MIN:B**	0.0 0.0	% %	Deadband compensation or flow characteristic linearization	0x2013 / 100 0x2014 / 100
MAX:A **MAX:B**	100.0 100.0	% %	Output scaling	0x1580 / 100 0x1581 / 100
TRIGGER	2.0	%	Trigger point of MIN parameter	0x2015 / 100
OFFSET	0.0	%	Output offset value	0x2016 / 100
Pressure control (MODE = PRESSURE)				
RA:UP **RA:DOWN**	100 100	ms ms	Ramp times for the pressure setpoint	0x2041 0x2042
P_OFFSET	0	mbar	Pressure offset, is added to the actual value	0x2040
DZ	90.0	mm	Piston diameter of the cylinder	0x2043 / 100
DS1	0.0	mm	Rod diameter 1	0x2044 / 100
DS2	40.0	mm	Rod diameter 2	0x2045 / 100
AR	1.246154	-	Area ratio (calculated, display only)	
Parameter Set 1				
C1:P **C1:I** **C1:D** **C1:D_T1** **C1:I_ACT**	0.5 400.0 0.0 1.0 1.0	- ms ms ms %	P Gain I Gain, reset time D Gain, derivative time D filter Integrator activation threshold	0x2050 / 100 0x2051 / 10 0x2052 / 10 0x2053 / 10 0x2054 / 100

Parameter Set 2				
C2:P	0.5	-	P Gain	0x2055 / 100
C2:I	400.0	ms	I Gain, reset time	0x2056 / 10
C2:D	0.0	ms	D Gain, derivative time	0x2057 / 10
C2:D_T1	1.0	ms	D filter	0x2058 / 10
C2:I_ACT	1.0	%	Integrator activation threshold	0x2059 / 100
Special functions (MODE = EXTRA)				
Feedforward				
FF:A	0.0	%	Feed forward control gain factors	0x2022 / 100
FF:B	0.0	%		0x2023 / 100
Acceleration feedback				
AFC:P	0.0	-	Acceleration feedback (Gain and filter time)	0x2025 / 100
AFC:PT1	10.0	ms		0x2026
AFC_V0:A	8	1/s	Closed loop gain with acceleration feedback	0x2027
AFC_V0:B	8	1/s		0x2028
Drift compensation, fine positioning				
DC:AV	0.0	%	point of activation	0x2029 / 100
DC:DV	0.0	%	point of deactivation	0x202A / 100
DC:I	2000	ms	reset time of the integrator	0x202B
DC:CR	5.0	%	output limit	0x202C / 100
MR controller				
MR:T1	20.0	ms	filter constants of the MR – controller	0x202d
MR:T2	32.0	ms		0x202e
Additionally transmitted bus signals				
SELPLUS:1	-	-	Selection of additional signal 1	0x2076
SELPLUS:2	-	-	Selection of additional signal 2	0x2077
Integrator Limitation (Pressure Controller)				
CP:I_ULIM	100.0	%	Upper integrator limit	0x205A
CP:I_LLIM	-100.0	%	Lower integrator limit	0x205B
Behavior of the profile generator when the pressure controller is active				
PROFSTOP	OFF	-	Stop the profile generator	
Parameters of the script				
PAR1 ... PAR10	-	-	Free parameters for use in the script	0x15A1 / 100 … 0x15AA
MON:A... MON:D	-	-	Assignment of process value displays SC:A .. SC:D to M - lines	
CCSET	X Y	- -	Free characteristic curve, X – coordinates (ascending), Y – coordinates	0x9040[1] - 0x9069 / 100
PI:KP	1.0	-	Free controller: Proportional gain	0x1600 / 100
PI:TN	1.0	s	Free controller: Reset time	0x1601 / 100
PI:YR	100.0	-	Free controller: Feedback allowance	0x1602 / 100
Fieldbus				
PNVOL	-	NORMAL	Extent of data exchange	

[1] The coordinates are indexed in the order X-10/Y-10...X10/Y10. X-10 and X10 cannot be changed.

Special commands				
SETZERO[2]	-	-	Automatic offset adjustment via Fieldbus	0x2018
MR	OFF	-	Activation of the MR controller via command	
ACA:CYCLE ACA:POS1 ACA:POS2	0 25 75	ms mm mm	Square-wave generator: cycle time Lower switching position Upper switching position	
DIAG	-	-	Query of the last switch-off causes	
SSI:BITMASK	0	-	Masking out bits from the SSI telegram	
NEGW	OFF	-	Release of negative position setpoints	
DIAGTPS	-	-	Request diagnostic information on Profinet	
SETPFNAME	-	-	Set the station name	

[2] Writing this value with the value “1” results in the OFFSET:X value being set at that moment so that the new measured value is “0 mm” (zero point adjustment). The parameter is not visible in the table and can only be used via Fieldbus.

5.2 Basic Parameters

5.2.1 MODE (Switching between parameter groups)

Command	Parameters	Unit	Group
MODE x	x= SYSTEM|IO_CONF|POSITION| PRESSURE|EXTRA|ALL	-	**BASICS**

This command is changing the different parameter groups.

--- No group is displayed (default)
SYSTEM System data
IO_CONF Definition of the in- and output signals
POSITION Parameters of the position controller
PRESSURE Parameters of the pressure controller
EXTRA Special functions
ALL All parameters are listed

5.3 System Parameters

5.3.1 LG (Changing the language)

Command	Parameters	Unit	Group
LG x	x= DE|EN	-	**SYSTEM**

Either German or English can be selected for the help texts.

5.3.2 SENS (Monitoring of the module functions)

Command	Parameters	Unit	Group
SENS x	x= ON(1)|OFF(2)|AUTO(3)	-	**SYSTEM**

This command is used to activate/deactivate the monitoring functions (4… 20 mA sensors, output current, signal range and internal failures) of the module.

ON: All monitoring functions are active. Detected failures can be reset by deactivating the ENABLE input.

OFF: No monitoring function is active.

AUTO: AUTO RESET mode. All monitoring functions are active. If the failure doesn't exist anymore, the module automatically resumes to work.

Normally the monitoring functions are always active because otherwise no errors are detectable via the READY output. Deactivating is possible mainly for troubleshooting.

5.3.3 EOUT (Output signal if READY = OFF)

Command	Parameters	Unit	Group
EOUT x	x= -100.0… 100.0	%	**SYSTEM**

Output value in case of a detected error or a deactivated ENABLE input. This function can be used if the drive has to be moved to one of the two end positions (with defined speed).

|EOUT| = 0 The output is switched off in the event of an error. This is normal behavior.

CAUTION! If the output signal is 4… 20 mA, the output is switched off when **|EOUT| = 0**. If a null value = 12 mA is to be output in the event of an error, EOUT must be set to 0.01[3].

The output value defined here is stored permanently (independent from the parameter set). The effects should be analyzed by the user for each application from the point of view of safety.

Do not use the manual mode in conjunction with the EOUT command. After deactivation of the HAND input, the output is set to the EOUT value.

5.3.4 PASSFB (Password fieldbus)

Command	Parameters	Unit	Group
PASSFB x	x= 0… 10000000	-	**SYSTEM**

The value entered here serves as password for the parameterizing via fieldbus. For enabling parametrization it has to be send via fieldbus to the relating address. For a value of “0” the password protection is deactivated.

[3] This is necessary if using valves without error detection for signals lower than 4 mA. If the valve has an internal error detection, it moves into a defined position after switching off the output.

5.3.5 HAND (Manual speed)

Command	Parameters	Unit	Group
HAND:i x	**i= A|B** **x= -100.0… 100.0**	 %	**SYSTEM**

The manual speeds are set with these parameters. The drive moves in a controlled manner in the defined direction when the manual signal is active. The direction is defined by the sign of the parameters. After the manual signal has been disabled, the drive remains under control in the current position.

In case of a fault (position sensor fault), the drive can still be moved with this manual function. The output will be switched off when the hand signals are turned off.

The manual speed is also limited by the external speed demand imposed through the fieldbus (MIN evaluation).

Caution! Do not use the manual mode in conjunction with the EOUT command in case of errors. After deactivation of the HAND input, the output is reset to the EOUT value.

5.3.6 MONTIME (Modbus monitoring time)

This command is only available for Modbus/TCP devices.

Command	Parameters	Unit	Group
MONTIME X	x= 0… 50000	ms	**STD**

During operation, Modbus/TCP telegrams should be received cyclically from the master (client) in order to monitor its operation and the integrity of the communication link. This parameter allows you to select the maximum time interval that may elapse between the receipt of messages. If this time is exceeded, the device internally resets the receive data buffer, meaning that the device is no longer enabled and the function is terminated.

The monitoring function can be deactivated by setting the parameter value to “0”. The smallest practical setting is approximately twice as long as the normal communication cycle in the PLC programme and should not be set to less than 20 ms.

5.3.7 POSWIN:S (In-position monitoring)

5.3.8 POSWIN:D (Dynamic position monitoring)

Command	Parameters	Unit	Group
POSWIN:S x POSWIN:D x	x= 2… 200000 x= 2… 200000	µm µm	**SYSTEM**

This parameter is entered in µm.
The POSWIN command defines a range for which the INPOS message is generated. This function monitors the failure between the command and actual position. The positioning process is not influenced by this function.

START must be activated to generate the INPOS messages.

POSWIN:S Standard InPos signal

POSWIN:D Dynamic InPos signal to monitor the following error in case of NC mode[4]

5.3.9 PRESSWIN (Pressure window)

Command	Parameters	Unit	Group
PRESSWIN x	x= 100… 50000	mbar	**SYSTEM**

This parameter is entered in mbar.
The PRESSWIN command defines a range for which the signal is generated. This function monitors the deviation between command value and actual value.

[4] The INPOS:D should always be higher than the INPOS:S. Alternatively two different INPOS windows are definable.

5.4 Input and output configuration

5.4.1 DISP:IN (Parameter display)

Command	Parameters	Unit	Group
DISP:IN x	x= COMPLETE|SEL	-	**IO_CONFIG**

To improve the overview, parameters that are not important for the device function of inactive inputs are normally not displayed. For example, the SSI parameters are hidden when an analog sensor is used for position sensing.

However, it is still possible to use the signals from an SSI sensor in the script. The same applies to the analog input on PIN9/10.

If SHOW:IN is set to COMPLETE, all parameters for input signal processing are displayed in the table, allowing you to configure settings even for channels that are not currently in use.

5.4.2 SYS_RANGE (Working stroke)

Command	Parameters	Unit	Group
SYS_RANGE x	x= 10… 10000	mm	**IO_CONFIG**

This command defines the full stroke, which corresponds to 100 % of the input signal. If the demand is set incorrectly, this leads to incorrect system settings, and the dependent parameters such as speed and gain cannot be calculated correctly.

5.4.3 SELECT:X (Position sensor type)

Command	Parameters	Unit	Group
SELECT:X x	x= ANA(1)|SSI(0)	-	**IO_CONFIG**

The employed sensor type for position measurement can be chosen with this command.

ANA: The analog sensor interface (0… 10 V or 4… 20 mA) is active.

SSI: The SSI sensor interface is active. The input is matched to the sensor with the SSI commands. The relevant sensor data must be available.

5.4.4 SIGNAL X (Type of input signal)

Command	Parameters	Unit	Group
SIGNAL:I x	x= OFF(1)|U0-10(2)|I4-20(3)|U10-0(4)|I20-4(5)	-	**IO_CONFIG**

This command defines the type of input signal (current or voltage). Simultaneously the signal direction can be reversed. In OFF mode, the analog input is deactivated.

5.4.5 N_RANGE:X (Nominal range of the sensor)

Command	Parameters	Unit	Group
N_RANGE:X x	x= 10… 10000	mm	**IO_CONFIG**

N_RANGE (nominal range or nominal stroke) is used to define the length of the sensor. This value should usually be equal or higher than SYS_RANGE.

5.4.6 OFFSET:X (Sensor offset)

Command	Parameters	Unit	Group
OFFSET:X x	x= -1000000000… 1000000000	µm	**IO_CONFIG**

Adjustment of the zero point of the sensor. This parameter is internally limited by SYS_RANGE.

5.4.7 Using of the commands SYS_RANGE, N_RANGE:X and OFFSET:X

The application scaling will be done by these three commands. In this example the system is defined by a length of 120 mm of the sensor, a working stroke of 100 mm of the cylinder and an offset of 5 mm. These parameters have to be typed in and the axis is driving between 5 mm and 105 mm of the sensor stroke and between 0 mm and 100 mm of the cylinder stroke.

Correct scaling:
SYS_RANGE = 100 (mm)
N_RANGE:X = 120 (mm)
OFFSET:X = -5000 (µm)

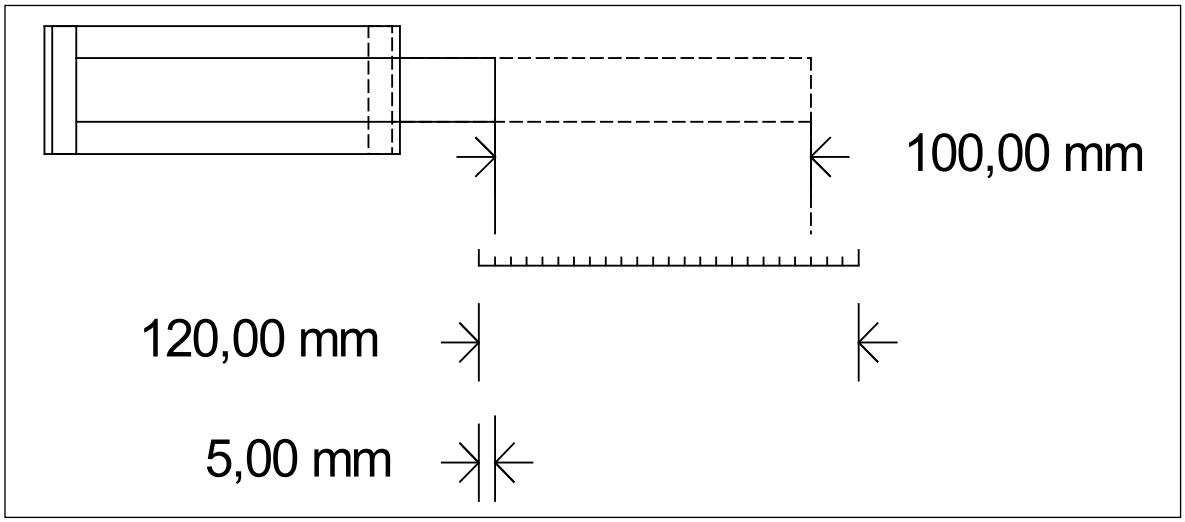

Figure 1 (Input scaling of the sensor)

5.4.8 SSI:POL (Signal direction)

Command	Parameters	Unit	Group
SSI:POL x	x= +(0)|-(1)	-	**IO_CONFIG**

This command serves to reverse the sensor's working direction.

5.4.9 SSI:RES (Signal resolution)

Command	Parameters	Unit	Group
SSI:RES x	x= 0.1… 100.0	µm	**IO_CONFIG**

The sensor signal resolution is defined with this parameter.
The appropriate data can be found in the sensor data sheet.

5.4.10 SSI:BITS (Number of data bits)

Command	Parameters	Unit	Group
SSI:BITS x	x= 8… 31	bit	**IO_CONFIG**

The number of data bits is entered with this parameter.
The appropriate data can be found in the sensor data sheet.

5.4.11 SSI:CODE (Signal coding)

Command	Parameters	Unit	Group
SSI:CODE x	x= GRAY(1)|BIN(0)	-	**IO_CONFIG**

The data coding is entered with this parameter.
The appropriate data can be found in the sensor data sheet.

5.4.12 SSI:ERRBIT (Position of the "out of range" bit)

Command	Parameters	Unit	Group
SSI:ERRBIT X	x= 0… 31	bit	**IO_CONFIG**

The position of the error bit will be defined by this parameter.
The appropriate data can be found in the sensor data sheet.
In case of no error bit, the default value is 0.

5.4.13 PS_RANGE (System pressure)

Command	Parameters	Unit	Group
PS_RANGE X	x= 10… 1000	bar	**IO_CONFIG**

This command defines the pressure which corresponds to 100 % of the input signal. If the demand is set incorrectly, this leads to incorrect system settings, and the dependent parameters cannot be calculated correctly.

5.4.14 N_RANGE X1/X2 (Nominal range of the pressure sensors)

Command	Parameters	Unit	Group
N_RANGE:X1 x N_Range:X2 x	x= 10… 1000 x= 10… 1000	bar bar	**IO_CONFIG**

N_RANGE (nominal range) is used to define the nominal value of the sensor. This value should always be equal or higher than SYS_RANGE / PS_RANGE. The control parameter cannot be calculated correctly in case of wrong values.

5.4.15 SIGNAL X1/X2 (Type of input signal)

See: description of the SIGNAL:X command

5.4.16 SIGNAL:910 (Type of the free analog input)

Command	Parameters	Unit	Group
SIGNAL:910 x	x= OFF (1) U0-10 (2) I4-20 (3) I0-20 (4) U+-10 (5)	-	**IO_CONFIG & SHOW:IN = ALL**

This command is used to set the type of input signal (current or voltage) at the free analog input PIN9 / PIN10. This is a bipolar differential input, which means that negative voltages can also be detected. The setting option U+-10 (bipolar voltage input) is provided for this purpose.

The signal can be inverted in the script, which is why this option is not available here.

Current signals:

Error detection for range under- or overflow is only performed for signal type I4-20. If you do not want to use this for a current signal or want to implement it in the script, set the input to I0-20 (mA) and carry out a rescaling in the script.

5.4.17 SIGNAL:U (Type and polarity of the output signal)

Command	Parameters	Unit	Group
SIGNAL:U x	x= U+-10 (1) I4-12-20 (2) U-+10 (3) I20-12-4 (4)	-	**IO_CONFIG**

This command is used to define the output signal (voltage or current) and to change the polarity.

Differential output ± 100 % corresponds with ± 10 V (0… 10 V at PIN 15 and PIN 16).
Current output ± 100 % corresponds with 4… 20 mA (PIN 15 to PIN 12). 12 mA (0 %) = center point of the valve.

Current output: An output current of << 4 mA indicates an error and the module is disabled. The current input of the proportional valves should be monitored by the valve. The valve has to be deactivated in case of < 4 mA input signal. Otherwise the EOUT command can be used to get a defined output signal.

5.5 Positioning controller

5.5.1 VMODE (Method of positioning)

Command	Parameters	Unit	Group
VMODE x	x= SDD(1)|NC(0)		**POSITION**

The fundamental control structure can be changed with this parameter.

SDD: **S**troke-**D**ependent **D**eceleration. In this mode, stroke-dependent deceleration is activated. This mode is the default mode and is suitable for most applications. With stroke-dependent deceleration the drive comes to a controlled stop at the target position. From the deceleration setpoint the drive then switches to closed loop control mode and moves accurately to the desired position. This control structure is very robust and reacts insensitively to external influences such as fluctuating pressures. One disadvantage is that the speed varies with the fluctuating pressure as the system runs under open-loop control.

NC: **N**umerically **C**ontrolled. In this mode a position profile is generated internally. The system always works under control and uses the following error to follow the position profile. The magnitude of the following error is determined by the dynamics and the closed loop gain. The advantage is that the speed is constant (regardless of external influences) due to the profile demand. Because of continuous control, it is necessary not to run at 100 % speed, as otherwise the errors cannot be corrected. 70… 80 % of the maximum speed is typical although especially the system behavior and the load pressure should be taken into account when specifying the speed.

5.5.2 Control structure in SDD mode

The control structure in SDD mode is designed for a robust and simple positioning. The blocks with dashed lines are optionally present, the functions should be used only in case of advanced knowledge of control engineering.

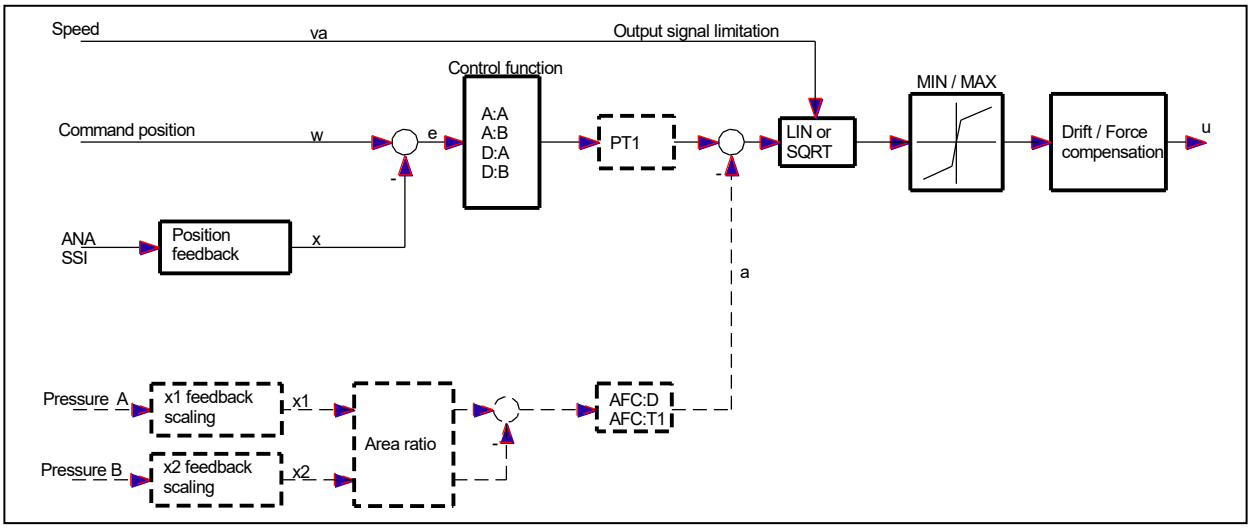

5.5.3 VRAMP (Ramp time for external speed demand)

Command	Parameters	Unit	Group
VRAMP.....x	x= 10… 5000	ms	**POSITION**

The rate of change of speed demand can be limited by this ramp time. In case of NC mode, this parameter should be set to 10 ms.

5.5.4 A (Acceleration (ramp) time in SDD mode)

Command	Parameters	Unit	Group
A:i x	i= A|B x= 1… 5000	 ms	**POSITION / SDD**

Ramp function for the 1st and 3rd quadrant.

The acceleration time for positioning is dependent on the direction. “A” corresponds to connection 15 and “B” corresponds to connection 16 (if POL = +).
Normally A = flow P-A, B-T and B = flow P-B, A-T.

For the quadrants 2 and 4, parameters D:A and D:B are used as the deceleration distance demand.

5.5.5 D (Deceleration / braking distance)

Command	Parameters	Unit	Group
D:i x	i= A|B x= 1… 10000	 mm	**POSITION / SDD**

This parameter is specified in mm[5].
The deceleration stroke is set for each direction of movement (A or B). The control gain is calculated internally depending on the deceleration distance. The shorter the deceleration distance, the higher the gain. A longer deceleration distance should be specified in the event of instability.

$$G_{Intern} = \frac{SYS_RANGE}{D_i}$$ Calculation of control gain

[5] **CAUTION!** In older modules this parameter was specified in % of the maximum stroke. Since data specification for this module has now been converted to mm, the relationship between the stroke (SYS_RANGE command) and these parameters must be taken into account.

5.5.6 Control structure in NC mode

Advanced control functions in NC mode. By PT1 behavior, the feedforward control and the acceleration feedback critical drives can be controlled with very low natural frequency too.

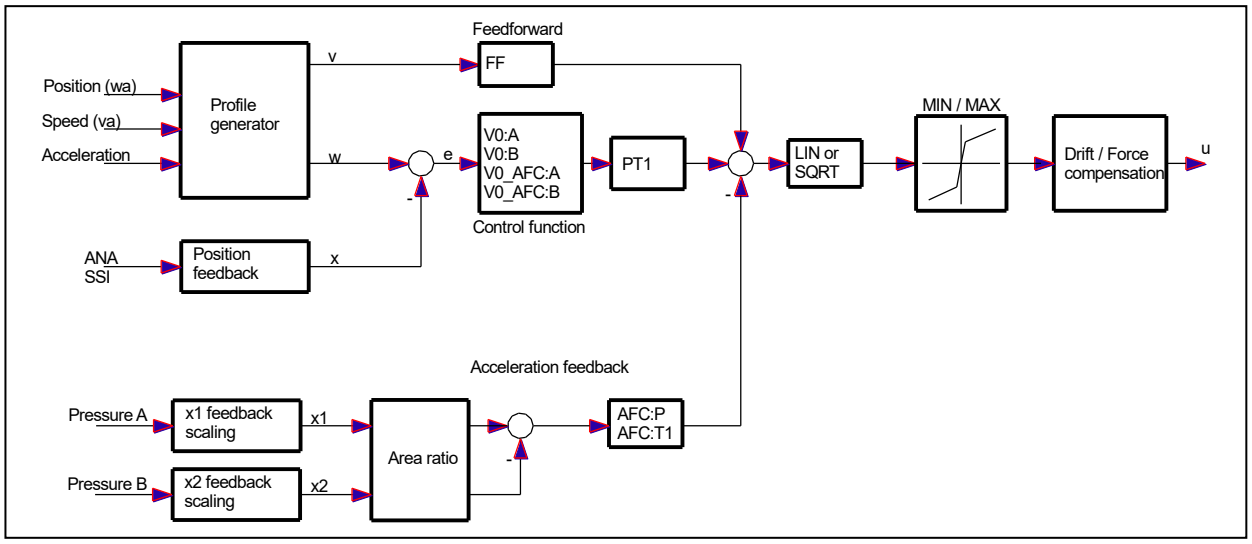

5.5.7 ACCEL (Acceleration in NC mode)

Command	Parameters	Unit	Group
ACCEL x	x= 1… 20000	mm/s²	**POSITION / NC**

This command is used to define the acceleration in NC mode. The command is active if the VMODE has been parameterized to NC. The maximum acceleration has to be set to a value lower than the technically achievable acceleration in order to yield a stable and oscillation – free behavior.

5.5.8 VMAX (Maximum speed in NC mode)

Command	Parameters	Unit	Group
VMAX x	x= 1… 2000	mm/s	**POSITION / NC**

Specification of the maximum speed in NC mode. This value is defined by the drive system and should be specified as precisely as possible (not too high under any circumstances). The speed is scaled by means of the VELO value or via the external speed demand. The command is only active if the VMODE has been parameterized to NC. If the drive has different speeds between retracting and extending, the lower speed must be set.

5.5.9 V0:RES (Scaling of the loop gain)

Command	Parameters	Unit	Group
V0:RES x	x= 1|1/100	-	**POSITION / NC**

V0:RES = 1 loop gain in s^{-1} (1/s) units.
V0:RES = 1/100 loop gain in 0,01 s^{-1} units[6].

The increased resolution 1/100 should only be used in case of $V_0 < 4$.

5.5.10 V_0 (Loop gain setting)

Command	Parameters	Unit	Group
V0:i x V0_AFC:i x	i= A|B x= 1… 400	 s^{-1}	**POSITION / NC**

This parameter is specified in s-1 (1/s). The directions can be entered separately.
In NC Mode normally the loop gain is specified rather than the deceleration stroke[7].
The internal gain is calculated from this gain value together with the parameter VMAX.

$$D_i = \frac{v_{\max}}{V_0}$$

$$G_{Intern} = \frac{SYS_RANGE}{D_i}$$

Calculation of the internal control gain

In NC Mode the following error at maximum speed is calculated by means of the loop gain. This following error corresponds to the deceleration stroke with stroke-dependent deceleration. The conversion and therefore also the correct data demands related to the closed loop control system are relatively simple if the relationship described here is taken into account.

5.5.11 D:S (Stop - Overtravel)

Command	Parameters	Unit	Group
D:S x	x= 1… 10000	mm	**POSITION**

If the ENABLE signal is switched off, the output signal is always abruptly removed. If only the START bit is switched off before a movement is completed, the controller brakes the axis with a defined deceleration. This is set by the parameter D:S as the overtravel. After deactivating START, a new target position in relation to the speed (current position plus D:S) is calculated and specified as the setpoint. Higher values lead to smoother braking.

[6] In case of very low loop gains (1 s^{-1} to 3 s^{-1}) the better resolution of the adjustment should be selected.

[7] The loop gain is alternatively defined as a KV factor with the unit (m/min)/mm or as V_0 in 1/s. The conversion is KV = V_0/16,67.

If the NC mode is selected, braking is compatible with previous versions for input values <= 10 mm. In this case, the lag distance serves as overtravel, i.e. the axis decelerates by immediately stopping the profile generator. This is usually a relatively hard reaction, which can be made softer by entering larger values.

5.5.12 PT1 (Transfer function of the controller)

Command	Parameters	Unit	Group
PT1 x	x= 1… 300	ms	**POSITION**

This parameter can be used to adapt the transfer function of the control function.
Hydraulic drives are often critically to control, especially in case of very fast valves. The PT_1 filter can be used to improve the damping rate and allows therefore higher loop gains.

Requirements for the use are: The natural frequency of the valve should be equal or higher than the natural frequency of the drive.

5.5.13 CTRL (Deceleration characteristics)

Command	Parameters	Unit	Group
CTRL x	x= lin(1)|sqrt1(2)|sqrt2(3)	-	**POSITION**

The deceleration characteristic is set with this parameter. In case of positively overlapped proportional valves the SQRT function should be used. The non-linear flow function of these valves is linearized by the SQRT[8] function.

In case of zero lapped valves (control valves and servo valves) the LIN or SQRT1 function should be used depending on the application. The progressive characteristic of the SQRT1 function has a better positioning accuracy but can also lead to longer positioning times in individual cases.

LIN: Linear deceleration characteristic (gain is increased by a factor of 1).

SQRT1: Root function for braking curve calculation. The gain is increased by a factor of 3 (in the target position). This is the default setting.

SQRT2: Root function for braking curve calculation. The gain is increased by a factor of 5 (in the target position). This setting should only be used with a significantly progressive flow through the valve.

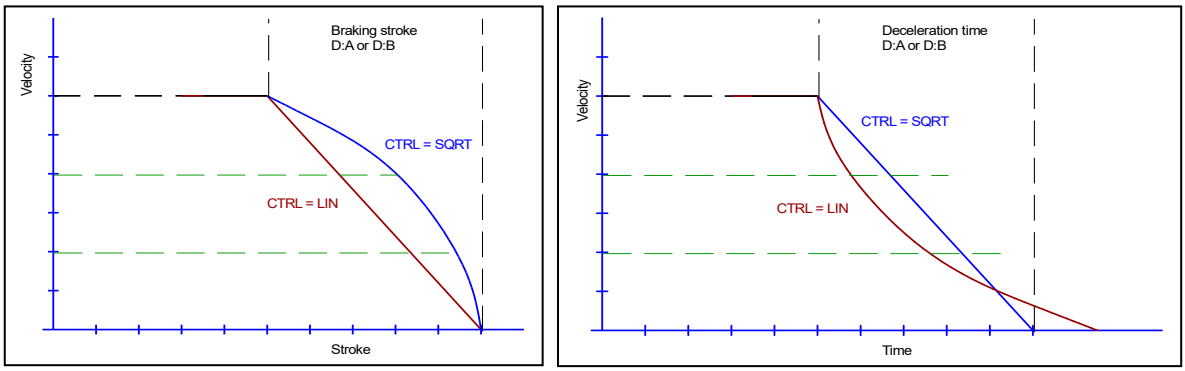

Figure 2 (Braking function with respect to stroke and time)

[8] The SQRT function generates constant deceleration and thus reaches the target position faster. This is achieved by increasing the gain during the deceleration process.

5.5.14 MIN (Deadband compensation)

5.5.15 MAX (Output scaling)

5.5.16 TRIGGER (Response threshold for the MIN parameter)

Command	Parameters	Unit	Group
	i= A|B	-	**POSITION**
MIN:i x	x= 0.0… 60.0	%	
MAX:i x	x= 30.0… 100.0	%	
TRIGGER x	x= 0.0… 40.0	%	

The output signal to the valve is adjusted by means of these commands. A kinked volume flow characteristic is used instead of the typical overlap step for the position controls. The advantage is a better and more stable positioning behavior. At the same time, kinked volume flow characteristics can also be adjusted with this compensation[9].

CAUTION: If there should also be adjustment options for deadband compensation on the valve or valve amplifier, it must be ensured that the adjustment is performed either at the power amplifier or in the module.
If the MIN value is set too high, this has an effect on the minimum speed, which can then no longer be adjusted. In extreme cases this leads to oscillation around the controlled position.

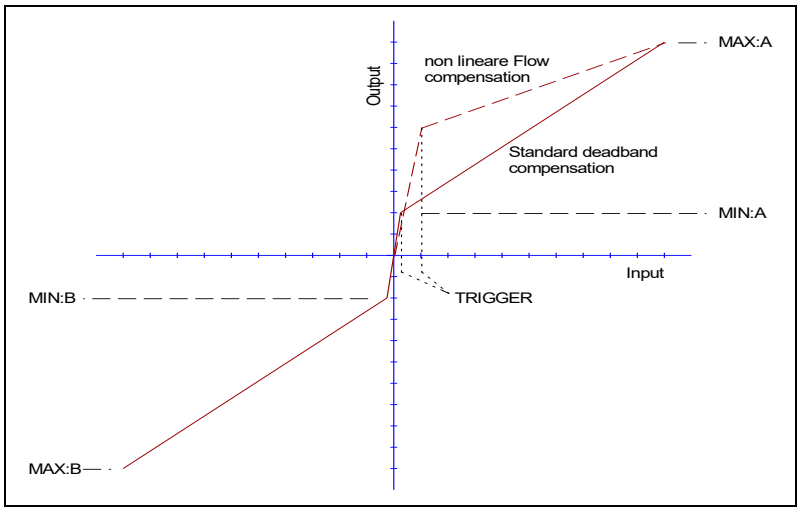

[9] Various manufacturers have valves with a defined nonlinear curve: e.g. a kink at 40 or 60 % (corresponding to 10 % input signal) of the nominal volume flow. In this case the TRIGGER value should be set to 10.0 and the MIN value to 40.0 (60.0).

If zero lapped or slightly underlapped valves are used, the volume flow gain in the zero range (within the underlap) is twice as high as in the normal working range. This can lead to vibrations and jittery behavior. To compensate this, the TRIGGER value should be set to approximately 2.0 and the MIN value to 1.0. The gain in the zero point is thus halved and an overall higher gain can often be set.

5.5.17 OFFSET (Valve zero point adjustment)

Command	Parameters	Unit	Group
OFFSET x	x= -100.0… 100.0	%	**POSITION**

The offset value is added to the output value. Valve zero offsets can be compensated with this parameter.

5.6 Pressure controller

5.6.1 Operating modes / controller structure

The pressure controller in the UHC can perform the following functions:

- None, i.e. the unit operates as a pure positioning module.
- Exclusive pressure control (PQ mode), no positioning
- Pressure limiting control, i.e. as soon as the specified pressure setpoint is reached, the pressure controller takes over.

Since the operating mode is selected via control bits of the fieldbus interface, it is possible to switch between these variants during operation.

ATTENTION: Avoid unnecessary switching by the higher-level control system.

Example: If a positioning movement is performed against a stop or a workpiece and it is clear that first a positioning process in NC mode at a specified speed and later a transition to pressure control is made, the pressure controller should be activated from the beginning. In this way the UHC with its fast cycle times can optimally perform the transition between the two controllers.

Control of the operating mode:

Mode	Bit „PQ_Active“	Bit „PQ_only“
pure positioning	FALSE	FALSE
PQ mode, no positioning	TRUE	TRUE
limiting control	TRUE	FALSE
direct control of the output	FALSE	TRUE

Controller schema:

SDD Mode

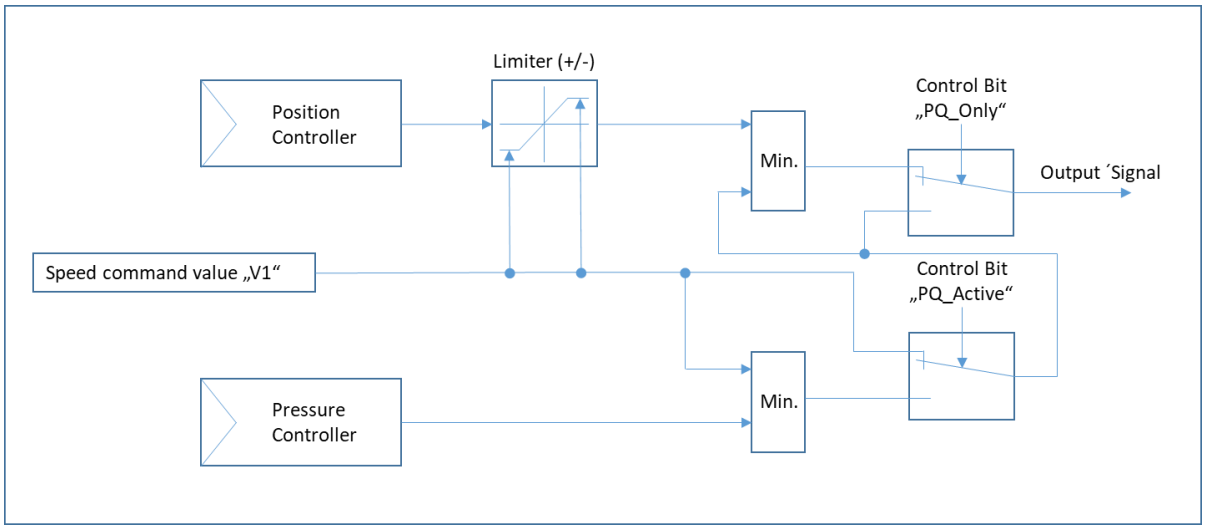

NC Mode:

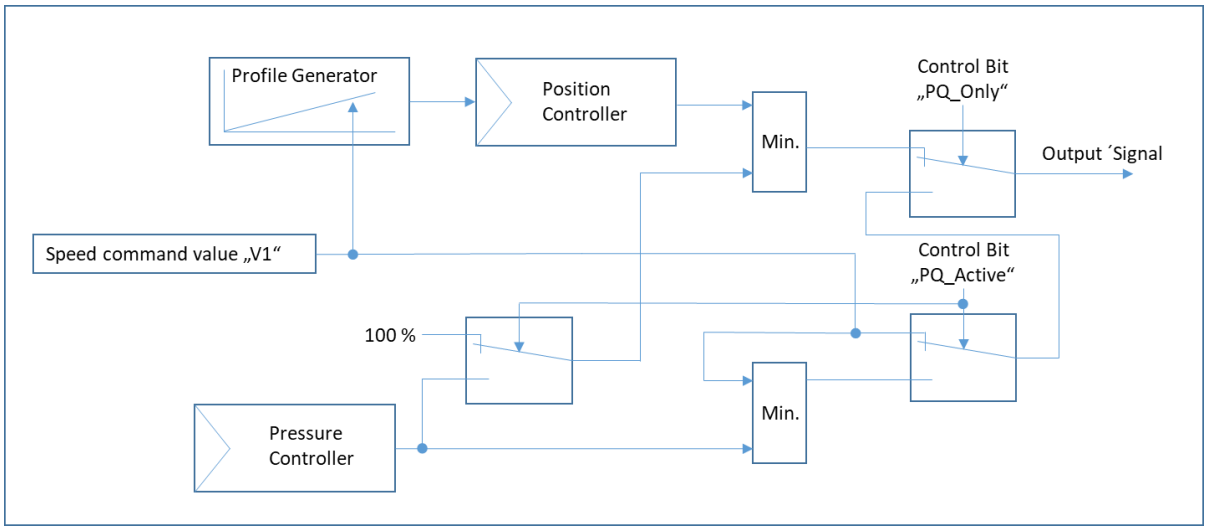

5.6.2 Operating direction / Inverting

In order to achieve a correct function in the interaction between pressure and position control, it is important that the direction of the actual value signals is determined according to this specification:

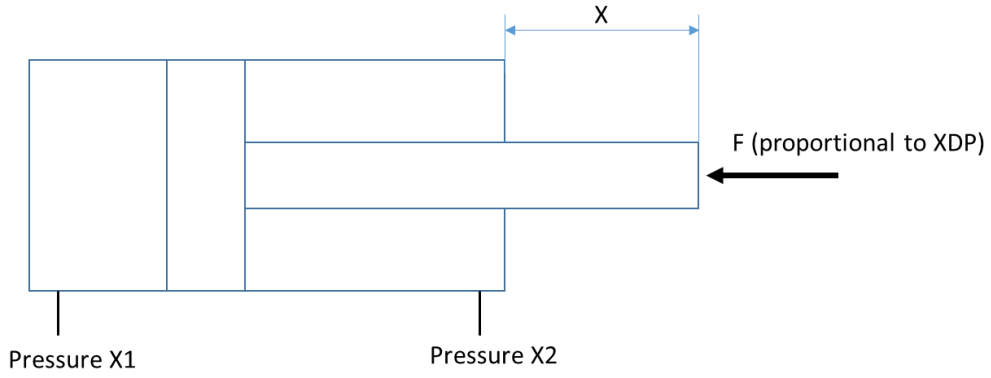

- A pressure at the measuring point "X1" causes the cylinder to extend (in this example) or to increase the measured displacement signal "X
- A pressure at measuring point "X2" causes the cylinder to retract or produce a reduction of the measured displacement signal "X", if signal X2 is present (omission e.g. in the case of plungers)
- A positive differential pressure XDP with "PQ Inverse" not set therefore corresponds to a force against the direction of movement of increasing actual position values X.

In a specific case, the sensors, the effective direction of the cylinder or the area ratio can deviate as long as these three principles are observed.

If, for example, the sensor polarity of the position measurement is inverted, it may be necessary to swap the connections of the pressure sensors on the module and change the parameter ARATIO to its reciprocal value.

Control of the pressure controller function by the bit "PQ_Inverse:

This bit is not suitable to enable a different assignment of the signals (see above). Instead, this bit can be used to determine whether the pressure controller should respond when the cylinder is extended or retracted (more precisely: during a movement with rising or falling "X").

If the bit is set, the calculation of XDP is inverted -> a positive value now corresponds to a force that is opposite to the retraction. At the same time, the coupling of the pressure controller signal into the signal path is carried out via a maximum value selection, so that the controller can influence the activation of the valve in the negative direction.

5.6.3 Calculation of the control variable XDP

In most cases, pressure control is used to limit a hydraulic force or set it to a defined value. Zero-cut control valves and differential cylinders are often used in combination with this device. With this combination, it is not sufficient to use a single pressure to determine the force, as there is pressure on both sides of the cylinder in the relevant control range. Simply determining the differential pressure is also not adequate, because the effective areas of the cylinder are not equal.
For this reason, the UHC uses a so-called pseudo differential pressure as the control variable. This value is proportional to the hydraulic force of the cylinder (neglecting friction).
The diameters of the piston and the rod(s) of the hydraulic cylinder, which are entered as parameters, are used to calculate this pseudo-differential pressure. This pressure is calculated in such a way that it produces the same force on the larger of the two areas as the two measured pressures.
If only one pressure sensor is connected (SIGNAL:X2 = OFF), the measured value is directly taken from X1.
If PQ Inverse is set, the sign of the XDP value is reversed.
Since XDP is proportional to the force of the cylinder, a proportionality constant can be calculated, which the device outputs as parameter KF. This value cannot be adjusted, as it is calculated from the diameters.

Fhyd [kN] = KF * XDP [bar].

5.6.4 RA (Command signal ramp time)

Command	Parameters	Unit	Group
RA:i x	i= UP|DOWN x= 1… 600000	ms	**PRESSURE**

The ramp times for the pressure command value are defined here in ms. Two separate time values are entered for increasing and decreasing pressure.

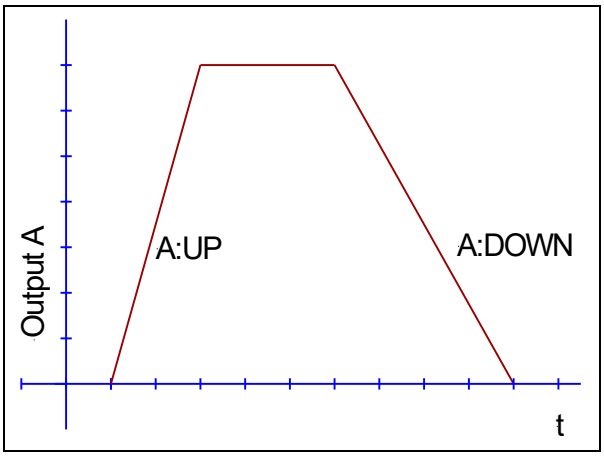

5.6.5 P_OFFSET (pressure offset)

Command	Parameters	Unit	Group
P_OFFSET x	x= -50000… 50000	mbar	**PRESSURE**

This parameter is entered in mbar.
This parameter adds an offset value to the resulting feedback signal. This serves for example to compensate external force differences (suspended loads, spring forces etc.) or to adjust the sensors.

5.6.6 DZ, DS1, DS2 (Diameters at the cylinder)

Command	Parameters	Unit	Group
DZ X DS1 DS2	x= 0,1… 1000,0 x= 0,0… 1000,0 x= 0,0… 1000,0	mm	**PRESSURE**

Diameters:
DZ = piston diameter, DS1 = rod diameter side 1, DS1 = rod diameter side 2
Sides 1 and 2 are defined in accordance with the pressure measuring points, see 5.6.2.
If there is no rod on the corresponding side, enter the value 0.

5.6.7 AR (cylinder area ratio)

Command	Parameters	Unit	Group
AR	Only for display!	-	**PRESSURE**

This parameter is calculated from the geometry inputs and cannot be modified.
It is only displayed if the inputs are plausible; otherwise, the value 1.0 is used instead.

The process variable XDP is calculated using the AR parameter:
XDP = X1 - X2 * 1000/ARATIO, if ARATIO >= 1,0 and
XDP = X1 * ARATIO/1000 - X2, if ARATIO < 1,0.

5.6.8 KF (Proportionality constant to force)

Command	Parameters	Unit	Group
KF	Only for display!	kN/bar	**PRESSURE**

This parameter is calculated from the geometry inputs and cannot be adjusted.
It is only displayed if the inputs are plausible; otherwise, the value 0.0 is displayed instead.
The parameter KF is used to calculate the process variable F, the theoretical hydraulic force:
F = XDP * KF
If you also want to display the force in a higher-level system, the transmitted pseudo differential pressure XDP can be multiplied by this value KF and displayed there.

5.6.9 C1/C2 (PID control parameters)

Command	Parameters	Unit	Group
Cx:i x	X = 1|2(parameter set) i= P|I|D|D_T1|I_ACT :P x= 0.0… 100.0 :I x= 0.0… 3000.0 :D x= 0.0… 120.0 :D_T1 x= 1.0… 100.0 :I_ACT x= 0.0… 100.0	 - ms ms ms %	**PRESSURE**

The control function will be parameterized via this command. The two parameters sets can be selected by a fieldbus bit.
The P, I and D gains are similar to a standard PID controller. The T1 factor is used for the D-gain in order to suppress high-frequency noise.
I_ACT controls the integrator function. To reduce pressure overshoots, an activation point for the integrator can be programmed via the I_ACT value. The integrator is activated if the actual pressure is higher than the programmed threshold.
The integrator function of the controller can be disabled in special cases by setting C:I to zero.

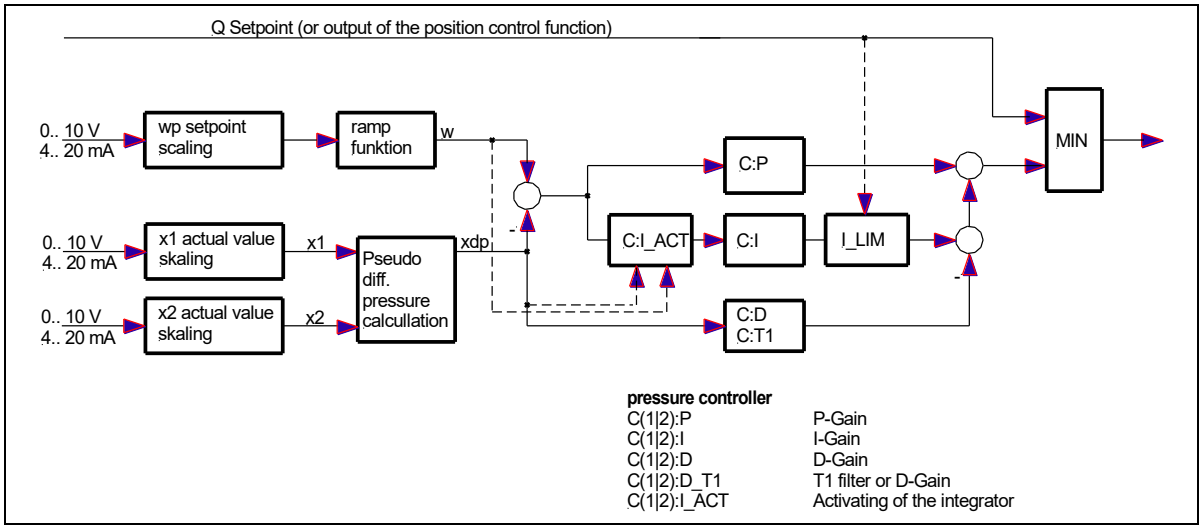
Q Setpoint (or output of the position control function)
0.. 10 V
4.. 20 mA
wp setpoint scaling
ramp funktion
w
0.. 10 V
4.. 20 mA
x1 actual value skaling
x1
Pseudo diff. pressure calcullation
xdp
0.. 10 V
4.. 20 mA
x2 actual value skaling
x2
C:P
C:I_ACT
C:I
I_LIM
C:D
C:T1
MIN
pressure controller
C(1|2):P P-Gain
C(1|2):I I-Gain
C(1|2):D D-Gain
C(1|2):D_T1 T1 filter or D-Gain
C(1|2):I_ACT Activating of the integrator

5.7 Advanced functions

5.7.1 FF (Feed forward in NC mode)

Command	Parameters	Unit	Group
FF:i X	I= A|B x= 0.0… 150.0	%	**EXTRA**

With this command a feed forward value is parameterized for the compensation of the following distance. The function is activated via the corresponding control bit (fieldbus).

5.7.2 AFC:P (Gain of the acceleration feedback)

5.7.3 AFC:T1 (Filter time for acceleration feedback)

Command	Parameters	Unit	Group
AFC:i x	i= P|T1 P x= 0.0… 100.0 T1 x= 1… 1000	 - ms	**EXTRA**

This command is used to define the filter time constant and gain of the acceleration feedback. The acceleration is measured by the differential pressure together with a kind of D-filter to compensate a constant external force (pressure).

The acceleration feedback can be activated by a control bit over the fieldbus. The loop gain parameters are switched over simultaneously between V0 and V0_AFC.

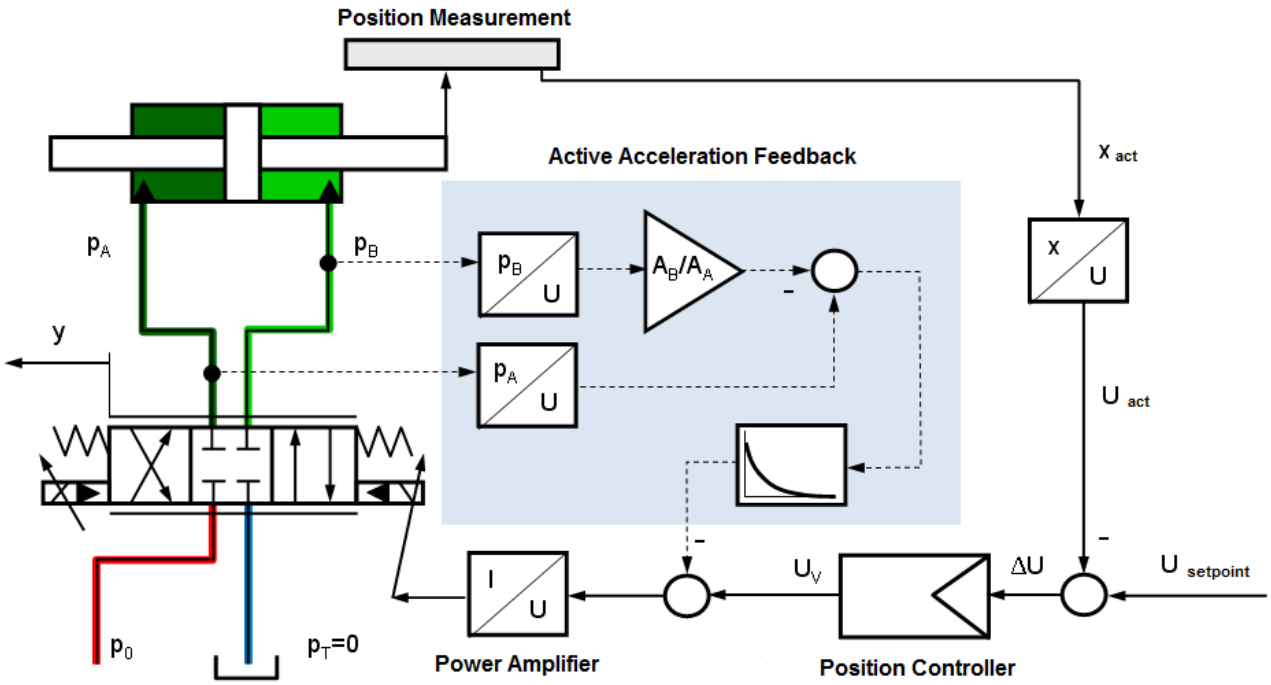

5.7.4 AFC_V0:A/B (Loop gain with active acceleration feedback)

Command	Parameters	Unit	Group
AFC_V0:i x	i= A|B x= 1… 400	s^{-1}	**EXTRA**

This parameter is specified in s-1 (1/s). The directions can be entered separately.

In case of a defective pressure sensor, the loop gain V0 should be used by the deactvation of the corrsponding fieldbus bit. Typically a lower loop gain is used without acceleration feedback.

5.7.5 Drift compensation / high accurate positioning

The high accurate positioning or the drift compensation can be used in case of external influence which is limiting the positioning accuracy. This function can be critical because limit cycling[10] could be caused by wrong parameterization.

Which positioning errors can be compensated[11]?

1. Zero point adjustment of the valve. By this kind of error a constant offset between command and feedback signal remains. This error is more or less constant.
2. Zero point deviation depending on the temperature. The same behavior as point 1, but the effect is increasing slowly (over the temperature).
3. Position error caused by an external force. All control and servo valves have a typical pressure gain characteristic. In case of external forces an output signal of 2…3 % has to be generated for the compensation of this force. And this signal is proportional to the positioning error. In opposite to point one and two the positioning error generated by forces can vary from cycle to cycle.

How does the drift compensation / high accurate positioning work?

The position errors should be compensated when the axis is near by the target position. The drift compensator generates a slowly changing output signal (integrating behavior) by which the a.m. errors can be eliminated.

To prevent instabilities, the integrator value will be frozen when the output value is lower than the deactivation limit (DC:DV).

Drift compensation (zero point adjustment)

By this function position errors described below point one and two are eliminated.

High accurate positioning (external force compensation)

To compensate positions errors as described below point three.

[10] The „limit cycling“ is a small and permanent oscillation around the target position. The main reason are static frictions and the hysteresis of the valve. By proper parameter setting, this can be avoided under the boundary condition that the desired accuracy is not achieved. In this case, the hydraulic system is the limiting factor in the accuracy.

[11] This is relevant for zero lapped control valves and servo valves.

Control bits via fieldbus:

Through the fieldbus it is possible to activate drift compensation as well as high accurate positioning.

This can be accomplished by using the following control bits:

DC_ACTIVE: General activation of the drift compensation and high accurate positioning[12].

DC_FEEZE: Freezing of the static drift compensation value.

DC_F_POS: Activation of the high accurate positioning (dynamic drift compensation).

Typical setup

Valve pressure gain: 2,5 %; the activation point has to be set to 3… 5 % (DC:AV 300… 500).
Valve hysteresis: 0,5 %; the deactivation point has to be set to 0,7… 1,0 % (DC:DV 70… 100). The lower the value the better the accuracy.

DC:CR should be equal to DC:AV. Limiting the control range of the integrator is necessary to avoid long settlement durations.

The optimum integrator time has to be determined experimentally. Starting with higher values is recommended.

The integration time usually has to be determined by experiments. For this it is recommended to start with a long time (1500 ms) and to reduce it gradually. If overshooting or limit cycling occurs, the time setting has become too small.

5.7.6 DC:AV (Activation value)

5.7.7 DC:DV (Deactivation value)

5.7.8 DC:I (Integrator time)

5.7.9 DC:CR (Integrator limitation)

Command	Parameter	Unit	Group
DC:I x	x= 10… 20000	ms	**EXTRA**
DC:AV x	x= 0.0… 20.0	%	
DC:DV x	x= 0.0… 10.0	%	
DC:CR x	x= 0.0… 100.0	%	

DC:I This parameter is used to define the integrator time. The lower this value the faster the compensation. Low values will result in „limit cycling“.

DC:AV This parameter is used to define the activation point (activation value). The DC function is completely deactivated in case of DC:AV = 0.

DC:DV This parameter is used to define the deactivation point (DV = deactivation value) Within the deactivation window no compensation value will be calculated (frozen state).
DC:AV = 0 should be used for best positioning, but „limit cycling“ can occur. This value should be set to 50 % of an acceptable error.

DC:CR The output range of the DC function will be limited (CR = control range) by this parameter.

[12] The static drift compensation to adjust the zero point and the freezing of this value should always be carried out at first. Only by this it is possible to avoid or minimise overshooting of the target position.

5.7.10 MR-Controller

Command	Parameters	Unit	Group
MR:T1 x MR:T2 x	x= 0… 10000	ms	**EXTRA**

The MR controller is a subordinate controller that linearises the hydraulic drive's behavior. The drive moves with a lag defined by the loop gain and the specified maximum speed (independent of external load forces).

ATTENTION! The MR controller can only be used in NC mode.

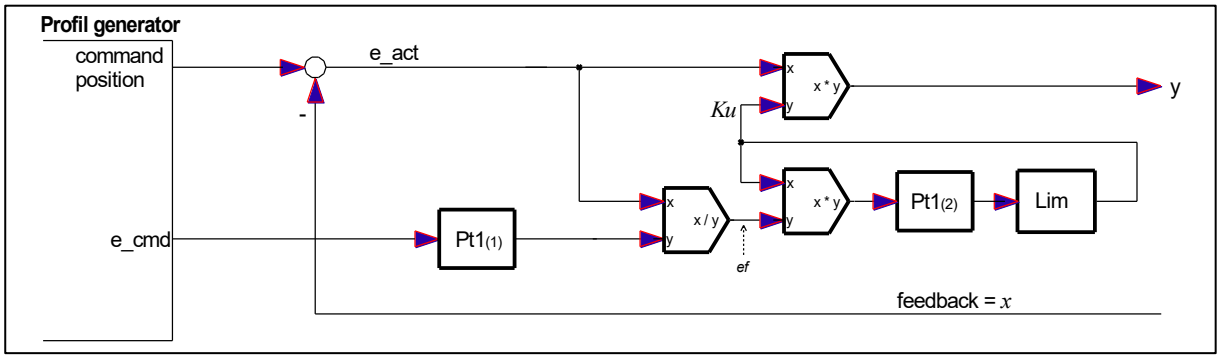

The controller is parameterized via the time constants T1 and T2.

The procedure for controller optimization is:

1. Disable MR controller
2. Optimize the loop gain in NC mode. It is advisable to reduce the loop gain slightly because the MR-controller is an additional dynamic element in the control loop.
3. Parameterize the MR controller: T1 = 1 / V0 and T2 = T1 * 1.6
   With this default setting, satisfactory results should be achievable.
   The correct parameterization is of course application-dependent.
4. Activate the MR controller by setting the appropriate bit via the fieldbus

5.7.11 SELPLUS (additionally transmitted bus signals)

Command	Parameter	Unit	Group
SELPLUS:i X	I= 1|2 x= -|E_S|CS|WP|EP|CP|U|VACT	-	**EXTRA**

Bytes 22 - 25 of the output signals to the fieldbus can be freely connected to two of the internal process variables. These parameters are used to determine the assignment.

The following table on the next page gives an overview of the adjustable signals, their value ranges and scaling.

Signal	Description	Range	Unit
E_S	Target lag distance	+/- 30000	0,01 mm
CS	Control signal of the position controller	+/- 10000	0,01 %
WP	Pressure setpoint after ramp	0… 10000	0,1 bar
EP	Pressure setpoint minus actual pressure value	+/- 10000	0,1 bar
CP	Control signal of the pressure controller	+/- 10000	0,01 %
U	Output signal of the module	+/- 10000	0,01 %
VACT	Measured actual speed	+/- 30000	0,1 mm/s

5.7.12 Limits of the pressure controller

Command	Parameter	Unit	Group
CP:I_ULIM X CP:I_LLIM X	x= 0.0… 100.0 x= -100.0… 0.0	% %	**EXTRA**

These parameters can be used to define the limits of the pressure controller or its integral part.

The upper limit is used to realize a continuous transition from position to pressure control. If values < 100.0 are entered here, this means that the integrator no longer covers the complete output range of the position controller. If the actual pressure value approaches the setpoint when the position controller is under full control, the P component is reduced and the pressure controller takes over continuously as soon as the sum of this component and the limited integral component falls below the output signal of the position controller.

If you want to prevent or limit the pressure controller from controlling the valve in the opposite direction beyond zero (active pressure reduction), you can use the ...LLIM parameter. If it is set to the value "0.0" this is completely suppressed.

5.7.13 PROFSTOP (Stop of the profile generator)

Command	Parameter	Unit	Group
PROFSTOP X	x= ON|OFF	-	**EXTRA**

If the device is operated in NC mode with the pressure controller activated, the profile generator will continue to run when the pressure controller intervenes, thus increasing the lag between the actual value and the setpoint. If the operating situation then changes and the position controller takes over the guidance again, this is accompanied by a fast movement in the setpoint direction which does not follow the profile. To avoid this behavior, the device can be set up via the parameter "PROFSTOP = ON" in such a way that the profile generator stops as soon as it has lost its guidance over the movement due to the intervention of the pressure controller. If the pressure regulator does not intervene any more, the profile is automatically released again.

5.7.14 PAR (free Parameters)

Command	Parameters	Unit	Group
PAR:i x	i= 1... 10	-	**EXTRA**

The parameters entered here are available for free use in the script. The setting can be made both by the WPC and the West Script software.

In older WPC versions, the entry is made with a decimal point shift in the unit 0.01.

5.7.15 MON (definition of the monitor signals)

Command	Parameters	Unit	Group
MON:i x	i= A, B, C, D x= 0... 60	-	**EXTRA**

These parameters do not influence the function of the module, but merely select which M signals of the script can be observed in the monitor and oscilloscope of the WPC.

The value "0" as the default setting does not correspond to any selection, as the M numbers start with "1". The corresponding SC value in the WPC monitor is then permanently displayed as "999.99".

5.7.16 CCSET (free linearisation for the script)

Command	Parameters	Unit	Group
CCSET:I X Y	i= -10... 10 x= -10000... 10000 y= -10000... 10000	- 0,01 % 0,01 %	**EXTENDED**

At this point, a characteristic curve can be defined based on 21 pairs of values.

This can be used in the script via the "CC" function.

The X-axis corresponds to the input signal, the Y-axis to the output signal.

Restrictions when entering values:

- The X coordinates must increase monotonically
- The X coordinate of the first interpolation point is -10000, corresponding to -100.0 [%]
- The X coordinate of the last interpolation point is 10000, corresponding to 100.0 [%]

The default setting provides for a completely linear assignment with equidistant interpolation points:

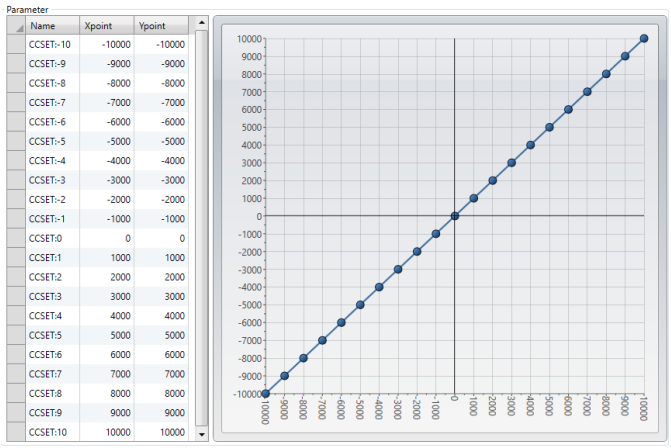

Parameter

Name	Xpoint	Ypoint
CCSET:-10	-10000	-10000
CCSET:-9	-9000	-9000
CCSET:-8	-8000	-8000
CCSET:-7	-7000	-7000
CCSET:-6	-6000	-6000
CCSET:-5	-5000	-5000
CCSET:-4	-4000	-4000
CCSET:-3	-3000	-3000
CCSET:-2	-2000	-2000
CCSET:-1	-1000	-1000
CCSET:0	0	0
CCSET:1	1000	1000
CCSET:2	2000	2000
CCSET:3	3000	3000
CCSET:4	4000	4000
CCSET:5	5000	5000
CCSET:6	6000	6000
CCSET:7	7000	7000
CCSET:8	8000	8000
CCSET:9	9000	9000
CCSET:10	10000	10000

The output of the curve encoder is calculated using linear interpolation:
y=(x-x1)*(y1-y0)/(x1-x0)+y1.
The input signal of the function is set internally to the range of
-100.0 [%] ... 100.0 [%], so that no extrapolation takes place.
The effects of linearisation can be assessed via the process data in the monitor or oscilloscope.

5.7.17 Free PI controller

Command	Parameter	Unit	Group
PI:KP x PI:TN x PI:YR x	x= +/- 1000,0 x= 0... 1000,0 x >= 0	- s -	**EXTENDED**

These parameters can be used to parameterise a universal, widely adjustable PI controller with optional external feedback.
external feedback can be parameterised. This controller can be configured in the script programme for various

TN = 0 switches off the I component.

YR is used to determine what is known as a feedback margin: The output signal of the controller and the integrator it contains are limited so that they lie within a band +/- YR around the feedback value.

In older WPC versions, the entry is made with a decimal point shift in the units 0.01 or 0.01s.

If the feedback value is fixed at 50% and YR is set to "50.0", this results in a limitation of the output signal to 0...100%.

If the feedback value is set to 0% and YR is set to "100.0", this results in the output signal being limited to +/- 100%.

If the signal continues to influence the output or external limitations, the correspondingly adjusted signal should be fed back.

5.7.18 PNVOL (Volume of data exchange)

This parameter is only available on Profinet devices. EtherCAT devices transmit 64 bytes by default.

Command	Parameter	Unit	Group
PNVOL X	x= NORMAL|EXTEND	-	**EXTENDED**

This parameter allows the transmitted fieldbus values to be configured to 64 bytes (bidirectional).

This corresponds to the EXTEND setting. Values exceeding 32 bytes can be used in script programming.

Please note that the PLC must also be configured accordingly (see Chapters 7.5 and 12).

5.8 Special commands

5.8.1 MR (Activation of the MR-Controller)

Command	Parameters	Unit	Group
MR X	x= ON|OFF		**TERMINAL**

Like the activation via the fieldbus, the MR controller can be activated by this command as described in the chapter MR-controller. The control bit "MR" of the fieldbus control is overwritten, if this command has been parameterized to "ON". The purpose of this function is to be able to activate the MR – controller without fieldbus connection. So it is possible to operate it during the commissioning using the remote – control function in the monitor window of the WPC program.

5.8.2 Remote control square - wave generator

Command	Parameters	Unit	Group
ACA:i x	i= CYCLE|POS1|POS2 :CYCLE x= 0… 30000 :POS1 x= 0… 10000 :POS2 x= 1… 10000	 ms mm mm	**TERMINAL**

Using remote control (a WPC function), a square-wave generator can facilitate commissioning by holding the axis in motion cyclically between two positions. The lower position is determined by the command "ACA: POS1" in mm. The upper position is corresponding to "ACA: POS2".
The generator is only started if the parameter "ACA: CYCLE" is set to a time above zero. The value should be chosen appropriately according to the axis speed.

5.8.3 DIAG (Query of the last switch-off causes)

If this command is entered in the terminal window, the last 10 shutdowns (loss of Ready when Enable is present) are displayed. However, the causes of the shutdown are not stored when the supply voltage is switched off. The last cause is displayed in the bottom line of the list. Entries "---" indicate unused memory cells.

An example:

```
>DIAG
---
---
---
---
---
---
---
---
SSI-Sensor
INPUT PIN 6
>
```

5.8.4 SSI:BITMASK

Command	Parameters	Unit	Group
SSI:BITMASK X	x= - 2147483647 … 2147483647	-	**TERMINAL**

Some SSI sensors provide several bits with diagnostic information. Via the parameter SSI:ERRBIT one of these bits can be selected for error detection and removed from the conversion of the measured value. If several bits must be blanked out, this can be done via this mask. Convert the bit pattern, in which a "1" marks the bits to be blanked, into a decimal number and enter this number here.

5.8.5 NEGW (Release of negative position setpoints)

Command	Parameter	Unit	Group
NEGW X	x= ON|OFF	-	**TERMINAL**

The specification of negative position setpoints can be useful if you have set a negative sensor offset so that the actual position of the axis can actually fall below the zero point. In this way it is possible, for example, to move to the actual end stop via the profile generator and then readjust the offset.

5.8.6 ST (Status of the field bus signals)

Command	Parameter	Unit	Group
ST	-	-	**TERMINAL**

This command allows all input signals of the field bus interface to be queried in the terminal window. In addition, the communication status is displayed. PN AR is output for Profinet devices and means 'address relation', i.e. an existing connection to a master. In the redundant case (S2), 1 / 1 is output if both masters have access. In normal operation with one master, the display is 1 / 0. The other outputs are commented on in the claret and are self-explanatory.

5.8.7 DIAGTPS (Profinet - Diagnostic information)

Command	Parameters	Unit	Group
DIAGTPS	-	-	**Terminal**

This command is only available for Profinet devices and provides information on the status of the Profinet interface. It is used for expert analysis and can facilitate diagnosis in the event of a fault. In addition, the set Profinet device name is displayed.

5.8.8 SETPFNAME (Set the station name)

Command	Parameters	Unit	Group
SETPFNAME	x x x x	-	**Terminal**

This command is only available for Profinet devices.

It can be used to set the Profinet device name. See also section 7.3.

The name can be specified as a parameter. If the name is longer than 18 characters, it must be divided into blocks of a maximum of 18 characters each, which are entered separated by spaces (the 'x' in the table above should illustrate this)
Please note that WPC always displays lowercase letters entered in the terminal as uppercase letters. Since the device name, according to convention, must not contain uppercase letters, these are converted back into lowercase letters when received by the module. It therefore does not matter whether you use lower or uppercase letters when entering the name.
The command SETPFNAME -RESET resets the device to factory settings, i.e. a set name is deleted again.

5.8.9 MODIP (Communication settings)

This command is only available for Modbus/TCP devices.

Command	Parameters	Unit	Group
MODIP	A B C	-	**Terminal**

This command can be used to configure the Ethernet interface settings for Modbus/TCP.

If the command is entered without any parameters, the current settings are displayed: either DHCP or details of the static IP address, subnet mask and gateway.

To change the setting, specify either ‘DHCP’ or an IP address as the first parameter. The subnet mask is optional; if none is specified, the device uses 255.255.255.0

Similarly, specifying a gateway is optional; the setting 0.0.0.0 means that none is used.

Examples of use:

MODIP 192.168.2.15

MODIP 192.168.2.15 255.255.240.0

MODIP 192.168.2.15 255.255.240.0 192.168.2.100

MODIP DHCP

The addressing configured via this parameter only takes effect after the device has been restarted following a power-up.

Please note that after entering the communication settings using this command, the entire set of parameters is automatically saved.

5.9 PROCESS DATA (Monitoring)

Command	Description	Unit
WA	Demand value (input signal)	mm
W	Demand value (according to the profile generator)	mm
VA	Speed input	%
X	Actual position value	mm
E	Position error value	mm
E_S	Lag setpoint[13]	mm
EMR	Control deviation MR - Controller (special function)	mm
VMR	Gain MR – Controller	%
CS	Output of the position controller	%
WAP	Command pressure	%
WP	Command pressure (after ramp)	bar
X1	Actual pressure value 1	bar
X2	Actual pressure value 2	bar
XDP	Pseudo differential pressure	bar
F	Hydraulic force	kN
EP	Pressure error value	bar
CP	Output signal of the pressure controller	%
U	Output signal of the module	%
VACT	Actual measured speed	mm/s
PIN910	Input signal at PIN9/10	%
DT	Processing time of the control incl. script	µs

The process data are the variables which can be observed continuously on the monitor or on the oscilloscope.

[13] The lag setpoint is calculated on the basis of the adjusted controller gain, the maximum speed of the axis and the actual speed setpoint (only in NC mode). If the MR controller is activated it is possible to compare E and E_S during the movement and by this to evaluate the transient response of the algorithm.

6 Common device functions

6.1 Failure monitoring

Following possible error sources are monitored continuously when SENS = ON/AUTO:

Source	Fault	Characteristic
Feedback signal pressure PIN 13 / PIN 6 - 4... 20 mA	Out of range or broken wire	The output is deactivated if the pressure controller is enabled via the control bit "PQ_Active". There is no reaction in pure positioning mode.
Feedback signal position PIN 14 - 4… 20 mA	Out of range or broken wire	The output will be switched off.
Sensor signal at PIN9/10, set measuring range 4-20 mA	Out of range or broken wire	The output will be switched off. If this reaction is not desired, the signal should be set to 0-20 mA.
SSI-Sensor Sensor value	Out of range or broken wire	The output will be switched off.
EEPROM (when switching on)	Data error	The output is deactivated. The module can only be activated by saving the parameters again!
RC Mode	The WPC connection (since WPC-V4.0) is disconnected during RC operation, e.g. by exiting the program or pulling the USB plug.	The output will be switched off.
SCERR1 / 2	Errors generated in the script: The user can program his own monitoring functions in the script, which become effective via these predefined error messages.	The output will be switched off.

CAUTION: Take care of the EOUT command. Changes will influence the behavior.

6.2 Troubleshooting

It is assumed that the device is in an operable state and there is communication between the module and the WPC-300. Furthermore, the valve control parameterization has been set with the assistance of the valve data sheets.

The RC in monitor mode can be used to analyze faults.

CAUTION: All safety aspects must be thoroughly checked when working with the RC (Remote Control) mode. In this mode the module is controlled directly and the machine control cannot influence the module

FAULT	CAUSE / SOLUTION
ENABLE is active, the module does not respond and the READY LED is off.	There is presumably no power supply or the ENABLE signal (PIN 8) is not present. If there is no power supply, there is also no communication via our operating program. If a connection has been made to the WPC-300, then a power supply is also available. If the power supply exists, an attempt should be made to see whether the system can be moved by means of the HAND+ and HAND- inputs (measuring the output signal to the valve is helpful).
ENABLE is active, the READY LED is flashing.	The flashing READY LED signals that a fault has been detected by the module. The fault could be: • A broken cable or no signal at the input (PIN 13 or PIN 14), if 4… 20 mA signals are parameterized. • No SSI sensor • Internal data error: press the command/SAVE button to delete the data error. The system reloads the DEFAULT data. With the WPC-300 operating program the fault can be localized directly via the monitor.
ENABLE is active; the READY LED is on, the system moves to an end position.	The control circuit polarity is incorrect. The polarity can be changed with the POL command or by reversing the connections to PIN 15 and PIN 16.
ENABLE is active, the READY LED is on, the STATUS LED is not on, the system moves to the target position but doesn't reach it (positioning error).	Serious positioning errors can result from incorrect parameterization or incorrect system design. • Is the cylinder position specified correctly? • Are the deceleration strokes correct (to start the system the deceleration distances should be set to approx. 20… 25 % of the cylinder position[14])? • Is the valve a zero lapped control valve or a standard proportional valve? In case of a proportional valve, the valve overlap which may be present should be compensated for with the MIN parameters. Typical values can be found in the valve data sheet.
ENABLE is active, the READY LED is on and the system oscillates on the target.	The system is working and also actuating the valve. Various potential problems could be: • The parameterization is not yet adjusted to the system (gain too high). • There is severe interference on the power supply. • Very long sensor cables (> 40 m) and sensor signal interference. • The MIN setting to compensate the valve overlap is too high. As a basic principle, the parameterization of the sensor data and the controller settings must be carried out first (before switching on). An incorrect demand is equivalent to an incorrect system design which then leads to incorrect operation. If the system oscillates, the gain should first be reduced (longer deceleration distances for D:A and D:B) and in case of overlapped valves the MIN parameter should also be reduced.
Speed too low	The drive may be able to move to position but the speed is too low.

[14] The stability criterion of the hydraulic axis must be taken into account.

FAULT	CAUSE / SOLUTION

	• Check the control signal to the valve
	  • via the integrated oscilloscope (U variable)
	  • measure the signal to the valve with an external oscilloscope/voltmeter.
	• If the control is within the range of ± 100 % (± 10 V), the fault must be sought in the hydraulics.
	• If the control signal is relatively low, the following points should be checked:
	  • Is the internal/external speed signal limiting the speed?
	  • Which setting has been specified for the deceleration distance in relation to the POSITION?

Speed too high	The drive should move to position. The drive moves in and out too fast leading to uncontrolled behavior. Reducing the speed (MAX or VELO parameter) has very little or no effect. • The hydraulic system is over-sized. The entire parameterization of the movement cycle cannot be reproduced (overlap and deceleration distance settings)

6.3 Status Information

In the monitor section of the WPC program status information is displayed about the state of inputs, outputs the controllers and the unit itself. Green lights display positive information (ready states), yellow indicates that definable monitoring ranges have been reached and red indicates that faults have been detected. Tool tip texts appear when hovering the mouse over the indicators.

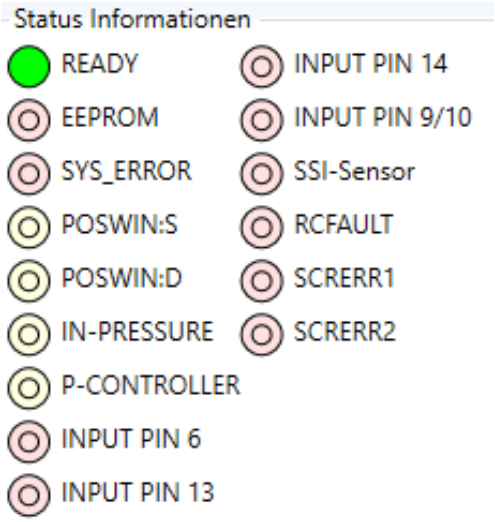

READY	General operational readiness
EEPROM	data error, press SAVE to store the values
SYS_ERROR	system error
POSWIN:S	the axis is in the stationary target window
POSDWIN:D	the axis is in the dynamic target window
IN-PRESSURE	the pressure is in the target window
P-CONTROLLER	the pressure controller has taken over
INPUT PIN 6	input error of the 4… 20 mA signal
INPUT PIN 13	input error of the 4… 20 mA signal
INPUT PIN 14	input error of the 4… 20 mA signal
INPUT PIN 9/10	input error of the 4… 20 mA signal
SSI-SENSOR	input error of the SSI interface
RCFAULT	separation of WPC when RC mode is active
SCERR1/2	errors triggered by the script program

7 Profinet IO RT interface

7.1 Profinet IO function

PROFINET is the standard for industrial ethernet based on IEEE 802.xx. PROFINET is based on the 100 Mb/s-version of full-duplex and switched Ethernet. PROFINET IO is designed for the fast data exchange between Ethernet-based controllers (master functionality) and field devices (slave functionality) with cycle times up to 4 ms.

7.2 Profinet Installation guide

The ProfiNet IO field devices are connected exclusively via switches as network components. A ProfiNet IO network can be set up in star, tree, line or ring topology. ProfiNet IO is based on the Fast Ethernet standard transmission with 100 Mbit / s. The transmission media are copper cables CAT5.

For the IP20 environment in the control cabinet, the RJ45 connector CAT5 according to EN 50173 or ISO / IEC 11801 is used. The pin assignment is compatible with the Ethernet standard (ISO / IEC 8802-3).

The connection between ProfiNet participants is called ProfiNet Channel. In most cases, ProfiNet channels are built with copper cables to IEC 61784-5-3 and IEC 24702. The maximum length of a ProfiNet channel, which is constructed with copper cables, is 100 m.

7.3 Profinet name assignment

All Profinet devices must be given a unique IP address and a name to enable communication. The IP address is automatically assigned to the device by the Profinet IO controller (PLC); it does not need to be set on the device or actively assigned to the device by the user.

The name of the PROFINET IO device is stored in the permanent memory of the device. It can be modified by an IO supervisor. This is usually the engineering system of the PLC used.

Alternatively, it is possible to assign a name to the device using the terminal command SETPFNAME. See section 5.9.6.

There are some conditions for the device names:

- The name consists of one or more name components that can be separated by a period (.).
- Restriction to 240 characters in total (lower case letters, numbers, hyphen or period)
  If the name is to be assigned using WPC, a maximum of 72 characters is possible.
- A name component within the device name, i.e. a character string between two points, can be a maximum of 63 characters long.
- A name component consists of the characters [a-z, 0-9].
- The device name must not begin or end with the character '-'.
- The device name must not begin with numbers.
- The device name must not have the form n.n.n.n (n = 0, ... 999).
- The device name must not begin with the character sequence 'port-xyz' or 'port-xyz-abcde' (a, b, c, d, e, x, y, z = 0, ... 9).

Please note that some master systems, such as TIA Portal, do not assign the device name given there directly to the device, but work with a so-called converted name. This conversion does not follow obvious rules.
However, the converted names are also displayed there:

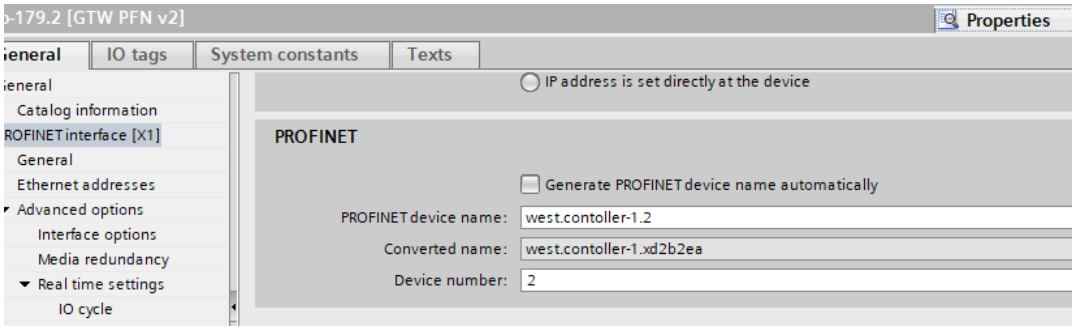

The preferred way of assigning names is to use the corresponding function of the engineering system. In the TIA Portal, this is done as follows:

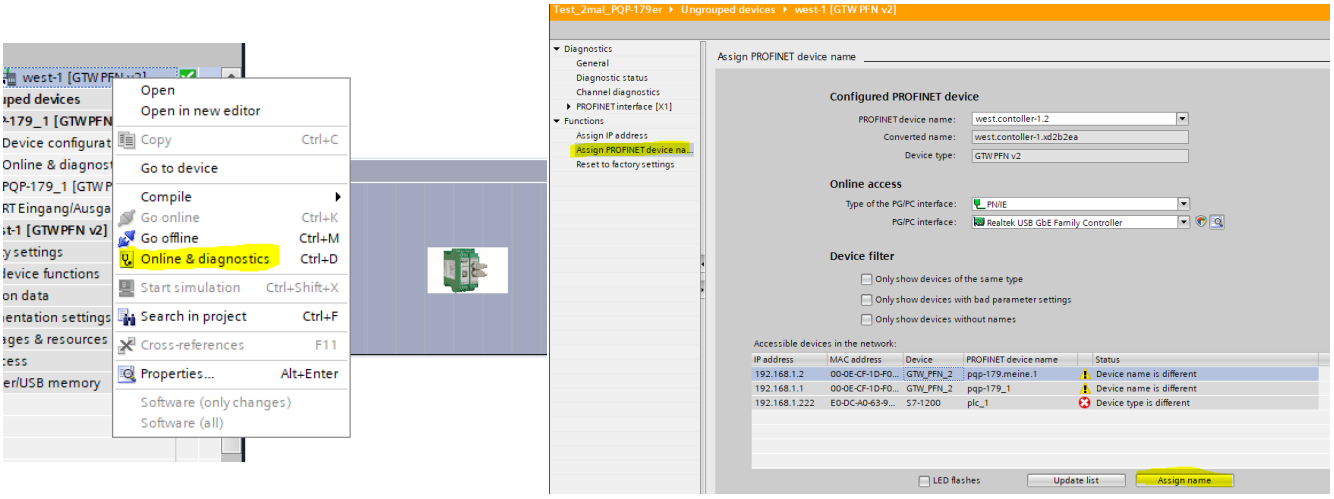

7.4 Device data file (GSDML)

The characteristics of an IO device are described by the device manufacturer in a general station description (GSD) file. The language used for this purpose is the GSDML (GSD Markup Language) - an XML based language. For I/O data, the GSDML file describes the structure of the cyclic input and output data transferred between the programmable controller and the PROFINET IO device. Any mismatch between the size or structure of the input and output data and the actual internal device structure generates an alarm to the controller.

In the configuration of transmission data select 32 bytes for input and 32 bytes for output.

8 EtherCAT IO interface

8.1 ETHERCAT CoE

EtherCAT is an ethernet-based field bus system, developed by Beckhoff and the EtherCAT Technology Group (ETG). EtherCAT is an open technology standardized in the international standards IEC 61158 and IEC 61784 as well as in ISO 15745-4. EtherCAT can provide the same communication mechanisms as are known from CANopen: object directory, PDO (process data objects) and SDO (service object objects). Even network management is comparable. For example, EtherCAT can be implement on devices that were previously equipped with CANopen with minimal effort; large parts of the CANopen firmware are reusable. The objects can optionally be expand to take account of the larger bandwidth of EtherCAT.

In order to create a user-friendly interface for device operation, different organizations have created various standards in which the following are defined:

- The device classes that exist (e.g.: class ‘rotary encoder’, ‘analogue input module’).
- The parameters that each representative of such a class has (obligatory and optional elements).
- The place where these parameters are to be found and the mechanism with which they are to be changed.

EtherCAT follows the so called CoE standard here: Can-Application-protocol-over-EtherCAT.
The process data objects (PDO) are used for the fast and efficient exchange of real-time data (for example I / O data, setpoints or actual values). In the EtherCAT telegram, no objects are addressed but the contents of the process data are sent directly from previously mapped parameters.

8.2 EtherCAT installation

EtherCAT supports almost any topology, Line, tree or star. The bus or line structure known from the fieldbuses thus also becomes available for Ethernet. Particularly useful for system wiring is the combination of line and junctions or stubs. The required interfaces exist on the couplers; no additional switches are required. Naturally, the classic switch-based Ethernet star topology can also be used.
The permissible cable length between two EtherCAT devices must not exceed 100 meters. This results from the FastEthernet technology, which mainly for reasons of signal attenuation over the Line length allows a maximum link length of 5 + 90 + 5 m if lines with appropriate properties.
To connect EtherCAT devices, use only Ethernet (cable + plug) connections at least of category 5 (CAT5) according to EN 50173 or ISO / IEC 11801. EtherCAT uses four wires of the cable for signal transmission. EtherCAT uses RJ45 connectors, for example. The contact assignment is the Ethernet standard (ISO / IEC 8802-3) is compatible.

8.3 EtherCAT access handling

The input and output data of the EtherCAT slave are displayed as CANopen Process Data Objects (PDO). The process data (PDOs) cyclically transmitted by an EtherCAT slave are the user data. They are expected or sent to the slave in the application. For this purpose, the EtherCAT Master (Beckhoff TwinCAT) parameterizes each EtherCAT slave during the start-up phase. It specifies the process data (size in bits / bytes, source location, transmission type) from or to the slave would like.

With so-called "intelligent" EtherCAT devices, the process data information is also available in the CoE directory. However, any changes in this CoE directory which lead to deviating PDO settings prevent the slave from booting successfully. It is not recommended to configure other than the intended process data, since the device firmware (if available) is tuned to these PDO combinations.

Object list:

- Index objectindex PDO
- Subindex subindex PDO
- Name surname of PDO
- Flag RW read or write status of PDO
- Flag RO read only status of PDO, it is not possible to write data to the object
- Flag P an additional P characterizes the object as a process data object
- Value value of the object

8.4 EtherCAT device profiles (ESI)

The ‘ESI file (CoE directory) is provided by the manufacturer of an EtherCAT device.
It is created in the description language XML and has a standardized format for the description of devices.
The ESI file contains information about:

- Description of the file (name, version, creation date, etc.)
- General device information (manufacturer name and code)
- Device name and type, versions
- Description of the supported objects by their attributes

Localization in the EtherCAT Slave:

The CoE directory as a parameter system must be administrated in the device in the firmware (FW) in the local controller. This is the so-called online directory, because it is only available to the user if the EtherCAT slave is in operation with operating voltage supplied and, if applicable, can be manipulated via EtherCAT communication. So that the parameters can be viewed and changed in advance without the presence of a slave, a default copy of the entire directory is usually stored in the device description file ESI (XML). This is called the offline directory. Changes in this directory do not affect the later operation of the slave with TwinCAT.

The ESI description also defines the process image, the communication type between master and slave/device and the device functions, if applicable. The physical device (firmware, if available) has to support the communication queries/settings of the master. This is backward compatible, i.e. newer devices (higher revision) should be supported if the EtherCAT master addresses them as an older revision.

The ranges in the Slave CoE that are important for the application-oriented EtherCAT fieldbus user are

- 0x1000: This is where fixed identity information for the device is stored, including name, manufacturer, serial number etc., plus information about the current and available process data configurations.
- 0x8000: This is where the operational and functional parameters for all channels are stored, such as filter settings or output frequency. The following ranges are also of interest
- 0x4000: In some EtherCAT devices the channel parameters are stored here (as an alternative to the 0x8000 range).
- 0x6000: Input PDOs ("input" from the perspective of the EtherCAT master)
- 0x7000: Output PDOs ("output" from the perspective of the EtherCAT master)

This device series uses a universal gateway in which all data is transferred to the input PDO and output PDO area. The parameterization of individual parameters can also be done by this. This keeps the interfaces compatible with other fieldbus topologies.

8.5 Standard Objects

Index Subi.	Name	Description	Type	Flags	Default
1000	Device Type	Device type of the EtherCAT slave	UINT32	RO	0x00000000
1008	Manufacturer Device Name	Device name of the EtherCAT slave	STRING	RO	POS-324-U-ETC
1009	Hardware version	Hardware version of the EtherCAT slave	UINT16	RO	0x0014
100A	Software version	Software version of the EtherCAT slave	UINT16	RO	0x001e
1018:0	Identity	Information to identify the slave	UINT8	RO	0x04
1018:1	Vendor ID	Manufacturer ID of the EtherCAT slave	UINT32	RO	0x000005ae
1018:2	Poduct code	Product code of the EtherCAT slave	UINT32	RO	0x00000010
1018:3	Revision number	Revision number of the EtherCAT slave	UINT32	RO	0x00000001
1019:4	Serial number	Serial number of the EtherCAT slave	UINT32	RO	0x00000000

9 Modbus/TCP interface

Modbus/TCP is a protocol that can be processed by most modern control systems.

Unlike Profinet or other fieldbuses, data exchange takes place acyclically; that is, the master (referred to as the client) sends requests, to which the slave (referred to as the server) either responds or with which values are written. The master's user programme therefore determines the frequency of the telegrams and the timing.

Another difference lies in the addressing of the slaves; these are identified solely by their IP address.

The IP address for this device can be configured via DHCP, or a static address can be set. See Section 5.8.9.

Modbus/TCP always uses port number 502.

9.1 Supported function codes

The following function codes are appropriate for data exchange with this device:

Code [hex]	Function	Accessing	Remark
0x02	Read Discrete Inputs	Status bits	Access by word as well (0x04)
0x04	Read Input Registers	Feedback	Numeric values and status words
0x05	Write Single Coil	Control bits	Access by word as well (0x06/0x10)
0x0F	Write Multiple Coils	Control bits	
0x06	Write Single Register	Setpoints, Control Words	
0x10	Write Multiple Registers	Setpoints, Control Words	

Input values for the amplifier are therefore always written to 'holding registers' or 'coils' (overlapping area).

Feedback can be retrieved from 'input registers' or 'discrete inputs'. It is possible to use function codes that read 'holding registers' or 'coils', but this serves no purpose.

Due to the overlap between the data areas, the user is free to transfer the control bits individually via 'Coils' or to group them into 16-bit blocks within their system and transfer them to registers via access on a words basis. For larger data volumes, this is the more effective option, as the entire input range can be transferred via a single access using function code 0x10. The same applies to the feedback signals.

The addresses can be found in the tables in the following chapters.

9.2 Addressing and register numbers

The mapping of addresses (which are transmitted in the telegram) to the so-called register numbers is historically based and can be confusing in Modbus. This description specifies both the so-called register numbers and the addresses. The latter are the numbers actually used in the telegrams. It should also be noted that some applications work with an additional offset. For example, in the MODPOLL programme, the value +1 (as specified here as an address) must be used by default. Example: The actual value of pressure sensor X1 can be accessed using the command modpoll -t3 -r **10** xxx.xxx.xxx.xxx (xxx = IP address).

The following table illustrates the relationships within the ranges used here:

Telegramm addresses	Register numbers	Data
0...31	1...32	Coils (control bits)
0…15	40001…40016	Holding registers (setpoints)
0…31	10001…10032	Discrete inputs (status bits)
0…15	30001…30016	Input registers (feedback)

9.3 Minimum scope of the data transferred

For the device to function, it is essential to set the ‘ENABLE’ and ‘START’ control bits and to specify a setpoint speed and a setpoint position (exception: pure pressure control).

As a minimum, coil 15 has to be set for enabling the unit and coil 14 must be set for the start, and setpoints must be written to register addresses 2, 3 and 4 / numbers 40003, 40004, 40005.

<u>Additional recommendations:</u>

- Carry out cyclical write operations, even if the values remain unchanged. The device will operate after the values have been transferred once, but only cyclical transmission makes it possible to monitor communication
- Use the ‘MONTIME’ parameter to implement life monitoring in the device
- Use the LIVEBIT functionality to monitor the status of communication within your control system. The simplest way to do this is to continuously write the status bit at LIVEBIT_OUT (in negated form) to the control bit LIVBIT_IN. This results in a constant alternation, which can be observed and utilised in a logic circuit to monitor communication.
- At least read the READY status bit to monitor the device’s operational readiness

10 Process data

The following description of data exchange applies if no changes have been made to it in the script program.

10.1 Input from Fieldbus

Index ETC	Nr.	Byte	Funktion	Type	Range	Unit	Modbus Holding Register / Address
7000:1	1	0	Control_1	UINT8			40001 / 0
7000:2	2	1	Control_2	UINT8			
7000:3	3	2	Control_3	UINT8			40002 / 1
7000:4	4	3	Control_4	UINT8			
7010:1	5	4	Position Setpoint High (MSB)	INT32	0… 10000000	0,001 mm	40003 / 2
	6	5	- - -				
	7	6	- - -				40004 / 3
	8	7	Position Setpoint Low (LSB)				
7010:2	9	8	Velocity Setpoint High	UINT16	0… 0x3fff (0… 100 %)	-	40005 / 4
	10	9	Velocity Setpoint Low				
7010:5	11	10	Command pressure High	UINT16	0,1…10000	0,1 bar	40006 / 5
	12	11	Command pressure Low				
	13	12	Spare RI1_W16			Reserve RI1_DW32 INT32[15]	40007 / 6
	14	13					
	15	14	Spare RI2_W16				40008 / 7
	16	15					
	17	16	Spare RI3_W16			Reserve RI2_DW32 INT32[15]	40009 / 8
	18	17					
	19	18	Spare RI4_W16				40010 / 9
	20	19					
	21	20	Spare RI5_W16			Reserve RI3_DW32 INT32[15]	40011 / 10
	22	21					
	23	22	Spare RI6_W16				40012 / 11
	24	23					
	25	24	Spare RI7_W16				40013 / 12
	26	25					
7040:1	27	26	Parameter value High (MSB)	INT32	Value of a parameter to be changed via the bus	Parameter-dependent	40014 / 13
	28	27	- - -				
	29	28	- - -				40015 / 14
	30	29	Parameter value Low (LSB)				
7040:2	31	30	Parameter address High	UINT16		hex	40016 / 15
	32	31	Parameter address Low				

[15] Double allocation in addition to the 16-bit values. Only one of the two data types can be used at a time.

On the UHC-326-U-MTC, setpoints are set using function codes 06 (0x06) = write to a single register or 16 (0x10) = write to multiple registers.

Control bits can be transmitted by register as control words using these codes, or alternatively as individual bits (coils) using function codes 05 (0x05) for a single bit or 15 (0x0f) for several consecutive bits. Please refer to the tables on the following pages for the coil addresses.

Description of the control byte 1

No	Bit	Name	Description	Type	Modbus Coil / Address
1	0	Direct	In direct mode new command positions are taken over directly from the controller while START signal is available.	BOOL	9 / 8
2	1	FF_Enable	Activation of feedforward control to reduce the lag	BOOL	10 / 9
3	2	A_Enable	Activation acceleration feedback	BOOL	11 / 10
4	3	---		BOOL	12 / 11
5	4	Hand_B	Manual mode. The axis is driven with the preset speed (parameter with the same name). This mode can only be used when ENABLE is available and the START comand is not set.	BOOL	13 / 12
6	5	Hand_A	Manual mode, see HAND:B. Two parameters are available for this mode in order to provide different speeds for both directions	BOOL	14 / 13
7	6	Start	Start signal for positioning. The actual transmitted position value is taken over and the output will be controlled relating to the parameterization.	BOOL	15 / 14
8	7	Enable	General activation of the axis. Malfunction monitoring and output signal get activated (in combination with the hardware enable)	BOOL	16 / 15

Description of the control byte 2

No	Bit	Name	Description	Type	Modbus Coil / Adresse
1	0			BOOL	1 / 0
2	1			BOOL	2 / 1
3	2			BOOL	3 / 2
4	3	MR	Aktivation of the MR controller	BOOL	4 / 3
5	4	PQ_Only	The position controller in deactivated. The maximum output (to influence the speed) is set via speed setpoint 1.	BOOL	5 / 4
6	5	PQ_Sel	Changeover between parameter set 1 (signal 0) and 2 (signal 1).	BOOL	6 / 5
7	6	PQ_Inverse	Inverts the effective direction of the pressure controller	BOOL	7 / 6
8	7	PQ_Active	Activates the pressure controller	BOOL	8 / 7

Description of the control byte 3

No	Bit	Name	Description	Type	Modbus Coil / Adresse
1	0	Livebit	Starts communication and serves as watchdog	BOOL	25 / 24
2	1	---		BOOL	26 / 25
3	2	---		BOOL	27 / 26
4	3	---		BOOL	28 / 27
5	4	---		BOOL	29 / 28
6	5	DC_Freeze	Storing of the drift compensation value as offset for the output.	BOOL	30 / 29
7	6	DC_Active	Drift compensation function (look at chapter drift compensation).	BOOL	31 / 30
8	7	DC_F_Pos_1	Fine positioning function (look at chapter drift compensation).	BOOL	32 / 31

Description of the control byte 4

No	Bit	Name	Description	Type	Modbus Coil / Adresse
1	0	---		BOOL	17 / 16
2	1	---		BOOL	18 / 17
3	2	---		BOOL	19 / 18
4	3	---		BOOL	20 / 19
5	4	---		BOOL	21 / 20
6	5	Para_Read	Read out a parameter value. Reads out the value of the parameter which is determined by PARA ADDRESS and returns this value in PARA VALUE of the data sent to the fieldbus. If the address is not valid the function will return „0xffffffff".	BOOL	22 / 21
7	6	Para_Valid	Parameter valid for programming (change low to high)	BOOL	23 / 22
8	7	Para_Mode	Activation of the parameterizing mode	BOOL	24 / 23

10.2 DATA sent to Fieldbus

Process data such as current position, internal position, a 32 Byte data frame is in use.

Index ETC	No.	Byte	Function	Type	Range	Unit	Modbus Input Register / Address
6000:1	1	0	Status_1	UINT8			30001 / 0
6000:2	2	1	Status_2	UINT8			
6000:3	3	2	Status_3	UINT8			30002 / 1
6000:4	4	3	Status_4	UINT8			
6010:1	5	4	Feedback position Hi (MSB)	UINT32	0… 10000000	0.001 mm	30003 / 2
	6	5	…				
	7	6	…				30004 / 3
	8	7	Feedback position Lo (LSB)				
6010:2	9	8	Internal command position Hi (MSB)	UINT32	0… 10000000	0.001 mm	30005 / 4
	10	9	…				
	11	10	…				30006 / 5
	12	11	Internal command position Lo (LSB)				
6010:3	13	12	Control error position Hi (MSB)	UINT32	0… 10000000	0.001 mm	30007 / 6
	14	13	…				
	15	14	… Control error position Lo (LSB)				30008 / 7
	16	15					
6010:4	17	16	Differential pressure feedback High	INT16	+/- 10000	0.1 bar	30009 / 8
	18	17	Differential pressure feedback Low				
6010:5	19	18	Feedback pressure X1 (MSB)	UINT16	0…10000	0.1 bar	30010 / 9
	20	19	Feedback pressure X1 (LSB)				
6010:6	21	20	Feedback pressure X2 (MSB)	UINT16	0…10000	0.1 bar	30011 / 10
	22	21	Feedback pressure X2 (LSB)				
6020:1	23	22	Additional output value 1 (MSB)	INT16			30012 / 11
	24	23	Additional output value 1 (LSB)				
6020:2	25	24	Additional output value 2 (MSB)	INT16			30013 / 12
	26	25	Additional output value 2 (LSB)				
6030:1	27	26	Spare RO1_W16	INT16			30014 / 13
	28	27					
6040:1	29	28	Read out parameter value Hi	UINT32		Parameter dependent	30015 / 14
	30	29	…				
	31	30	…				30016 / 15
	32	31	Read out parameter value Lo				

Description of the status byte 1:

No	Bit	Name	Description	Type	Modbus Discrete Input / Address
1	0	---		BOOL	10009 / 8
2	1	---		BOOL	10010 / 9
3	2	---		BOOL	10011 / 10
4	3	---		BOOL	10012 / 11
5	4	---		BOOL	10013 / 12
6	5	POSWIN:S	position within the target window	BOOL	10014 / 13
7	6	POSWIN:D	In-Position-Window (in NC-mode, following error window)	BOOL	10015 / 14
8	7	READY	System is enabled and no errors are detected	BOOL	10016 / 15

Description of the status byte 2:

No	Bit	Name	Description	Type	Modbus Discrete Input / Address
1	0	---		BOOL	10001 / 0
2	1	---		BOOL	10002 / 1
3	2	---		BOOL	10003 / 2
4	3	---		BOOL	10004 / 3
5	4	---		BOOL	10005 / 4
6	5	---		BOOL	10006 / 5
7	6	PRESSWIN	Pressure control error within the programmed boundary	BOOL	10007 / 6
8	7	PQ-ACTIVE	Pressure limitation control is active	BOOL	10008 / 7

Description of the status byte 3:

No	Bit	Name	Description	Type	Modbus Discrete Input / Address
1	0	PIN910_ERROR	Error at free the analog input (no 4…20 mA)	BOOL	10025 / 24
2	1	P_ERROR_2	Error at the analog pressure sensor (no 4…20 mA)	BOOL	10026 / 25
3	2	P_ERROR_2	Error at the analog pressure sensor (no 4…20 mA)	BOOL	10027 / 26
4	3	SSI_ERROR	Error at the digital position encoder (SSI)	BOOL	10028 / 27
5	4	X_ERROR	Error at the analog position sensor (no 4…20 mA)	BOOL	10029 / 28
6	5	---	-	BOOL	10030 / 29
7	6	CHKERROR	Check sum error in the data transmission (signal 0)	BOOL	10031 / 30
8	7	DERROR	EEPROM error (signal 0)	BOOL	10032 / 31

Please note: All error bits are inverted; in other words, an error is present if the corresponding bit **is not** set.

Description of the status byte 4:

No	Bit	Name	Description	Type	Modbus Discrete Input / Address
1	0	LIVEBIT_OUT	Feedback (= LIVEBIT), monitoring of the communication	BOOL	10017 / 16
2	1	---		BOOL	10018 / 17
3	2	---		BOOL	10019 / 18
4	3	---		BOOL	10020 / 19
5	4	---		BOOL	10021 / 20
6	5	---		BOOL	10022 / 21
7	6	PARA-RDY	A parameter value has been transferred correctly	BOOL	10023 / 22
8	7	PARA-ACT	The parameter mode is active	BOOL	10024 / 23

11 Parameterization via Fieldbus

11.1 Procedure

Preparation:

- Power supply of the different sections has to be available.
- For safety issues the system should not be active.

If active, the ENABLE bit in the control word has to be reset.

Attention: Parameterization via fieldbus can also be done having an active system. In this case it should be done very carefully because changes are directly operative.

Parameterization:

- At first the **PARA MODE** bit has to be set to enable parameterizing via Fieldbus

This will be reported via the **PARA ACTIVE** bit.

- Pretend **address** and new **value** of the parameter which should be changed.
- Setting the **PARA VALID** bit to high will transmit the data.

The **PARA READY** bit will report a successful parameterization.

Attention: A missing **para ready** bit means parameterization was not done.

Storing:

- Same procedure as parameterizing standard parameters.
- Selecting **2100** as **address**, written **value** does not matter (below 60000).

Password protection:

- If a password was set this has to be entered first for enabling parameterization. Procedure is the same as when parameterizing standard parameters.
- Select **2200** as **address** and send the password (PASSFB) as **value**.
- After **PARA READY** reports success, subsequently parameterizing can be done as long as **PARA MODE** stays active. After resetting it password has to be renewed when it gets activated again.

➡ If the password was transferred incorrect three times, the parameterization mode gets locked (reported by deactivated **PARA ACTIVE** bit). Only restarting the device enables three new attempts for enabling.

➡ Please note that a storage of the parameterization via the Fieldbus is limited in the number of writing cycles. Means it should be done only when necessary.

12 FlexiMod

12.1 Use Cases

If the function of the device needs to be adjusted beyond what is possible through simple parameterisation, script programming is used.

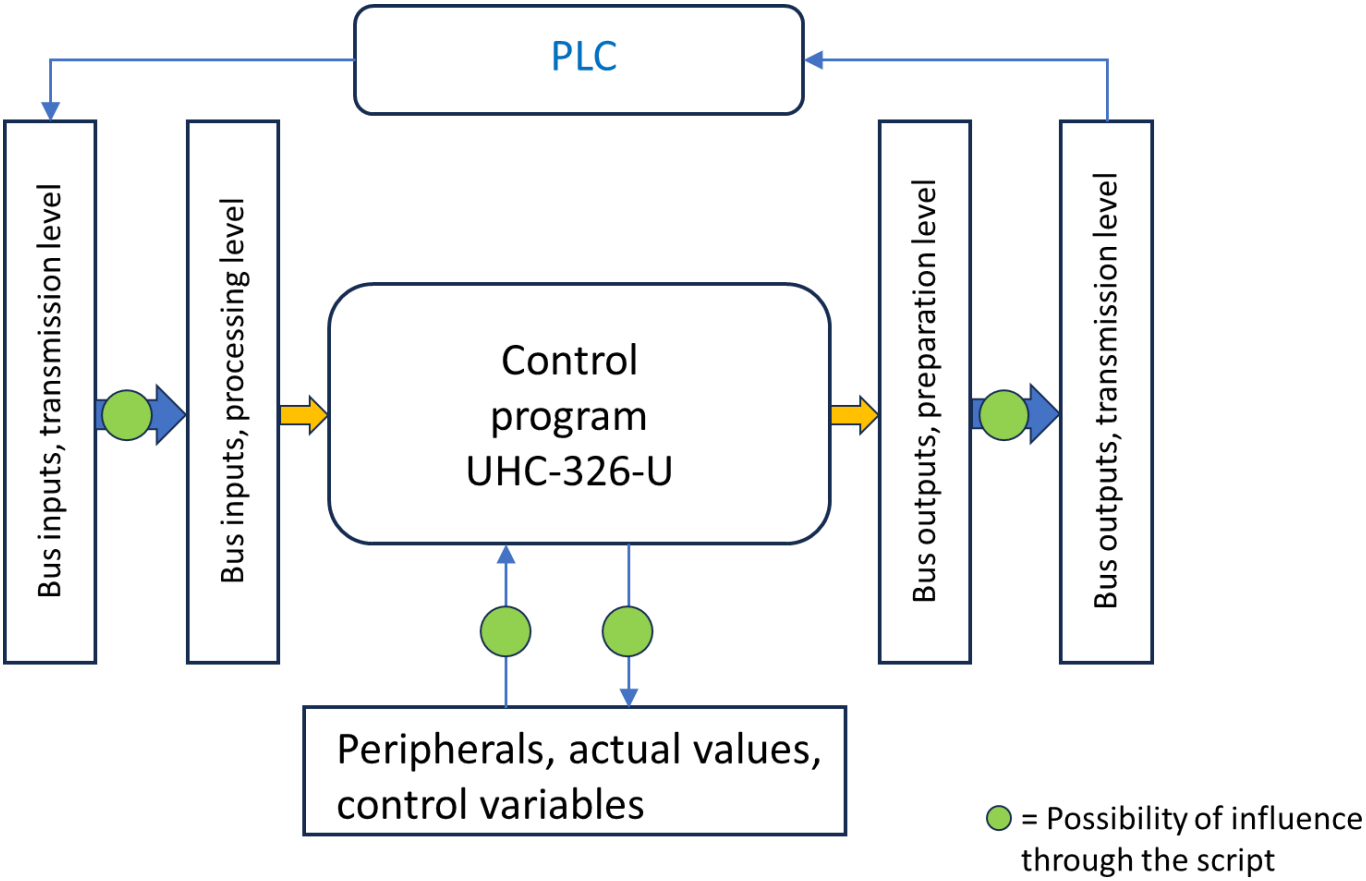

This diagram shows the possible influences. This means that both the fieldbus coupling signals and the process-related signals can be modified within very wide limits. Intermediate levels are used for bus coupling. The assignments described in the previous sections refer to an intermediate level, which is referred to as the processing level on the input side and the preparation level on the output side. By default, these levels are transferred unchanged from the transmission level (inputs) or transferred to this level (outputs). Script programming now makes it possible to influence this and change the transmission as desired. In extreme cases, the bus inputs can be completely replaced by physical inputs and the device can be operated without a field bus. The signals exchanged with the physical peripherals can also be used elsewhere and linked differently. Finally, the parameters of the control program can also be read and written from the script.

12.2 Scripting Language

12.2.1 Basic concept

A script consists of a list in which predefined memory cells are listed. For each of these cells, one can specify a function with which the content of the memory cell is calculated.

During runtime, these functions are called cyclically and the cell content is recalculated.

There are two types of cells, namely freely usable (M1 ... Mxx) and cells permanently connected to outputs. The content of the latter is either passed directly to physical outputs of the unit or serves as an input signal into a fixed defined internal function, for example as the setpoint of a controller.

The naming and function of the cells depends on the device, M... cells always exist.

The called functions can have up to three parameters, which are themselves memory cells or physical input signals.

An example:

Consider the following script:

```
M1          = GT   PIN14  PAR1
M2          = LT   PIN14  PAR2
...
LED_YR      = RS   M1     M2
```

The first line (M1) checks whether the input signal at PIN14 is greater than a parameterisable fixed value (PAR1).

The second line (M1) checks whether the input signal at PIN14 is lower than a second parameter.

The output signal, with which the right yellow LED of the unit is controlled, is the switching state of an RS - flipflop, which is connected to the results of these comparisons.

As can be seen, the memory cells can have the meaning of an analog value as well as a boolean variable. The script interpreter evaluates a content >= 1.0 as logically "TRUE" and functions that provide a logical output value set the corresponding memory cell to 0 or 1.0.

Analog input and output signals are always scaled in the range 0 ... 100%.

So, in the above example, if you set the parameter PAR1 to the value 50.0 and PAR2 to 40.0, you get a comparator with hysteresis. A voltage > 5 V at PIN 14 will switch on the right yellow LED. The LED lights up until the voltage has dropped below 4 V again.

12.2.2 Command overview

Command:	Meaning:	Operand 1:	Operand 2:	Operand 3:
Mathematics				
DIR	direct assignment	Source	-	-
ADD	Addition	Summand 1	Summand 2	Summand 3 (optional)
SUB	Subtraction	Minuend	Subtrahend	-
MUL	Multiplication	Factor 1	Factor 2	Factor 3 (optional)
DMUL	Multiplication + Division	Factor 1	Factor 2	Divisor
LIM	Limitation	Input value	Lower limit	Upper limit
SQRT	Square root function	Input value	-	-
SIN	Sine function	Input value	-	-
ABS	Absolute value	Input value	-	-

Command:	Meaning:	Operand 1:	Operand 2:	Operand 3:
NORM(L)	Normalisation to a range	Input value	Supporting point X1	Supporting point X2
UNORM	Scaling	Normalised value (u)	Supp. point Y1(u=0)	Supp. point Y2 (u=1)
INTEG	Integrator	Input value	Reset	Reset value (optional)
PT1	1st order low pass	Input value	Time constant	Reset
MIN	Minimum value selection	Value 1	Value 2	Value 3 (optional)
MAX	Maximum value selection	Value 1	Value 2	Value 3 (optional)
Logic				
SEL	Signal selector	Switching input (OP1)	Value at OP1 < 1	Value with OP1 >=1
GT	Comparison: OP1 > OP2	Value 1 (OP1)	Value 2 (OP2)	-
LT	Comparison: OP1 < OP2	Value 1	Value 2	-
GE	Comparison: OP1 >= OP2	Value 1	Value 2	-
LE	Comparison: OP1 <= OP2	Value 1	Value 2	-
AND	logical "and”	Value 1	Value 2	Value 3 (optional)
OR	logical "or”	Value 1	Value 2	Value 3 (optional)
NOT	logical negation	Input value	-	-
RS	RS-Flipflop	Set input	Reset input	-
Time functions				
RAMP	1 - Quadrant ramp	Input value	Ramp time	Reset
TE	Switch-on delay	Input value	Time	-
TA	Switch-off delay	Input value	Time	Reset
FP	Edge detection (rising)	Input value	-	-
FN	Edge detection (falling)	Input value	-	-
FUR	Square wave generator	Frequency	Amplitude	Reset
FUS	Sine wave generator	Frequency	Amplitude	Reset
FUT	Triangular wave generator	Frequency	Amplitude	Reset
Miscellaneous / Complex functions				
PI	Universal controller	Control deviation	Feedback Value	Tracking
CC	Linearisation curve	Input value	-	-
BUSRD	Read bus data	Byte number	Data type	Bit number or scaling
FUN2	Secondary function value	-	-	-
SPAR	Read / write parameters	Trigger function	Index	Write value (- for read)
MAP – Commands (Bus data)				
MAPC	Copy control bits	Target byte/bit	Source byte/bit	
MAPS	Copy status bits	Target byte/bit	Source byte/bit	
MAPMC	Write M-value to control bit	Target byte/bit	M-Line (source)	
MAPMS	Write M- value to status bit	Target byte/bit	M-Line (source)	
RNGC	Copy receive data area	Target start/end	Source start/end	
RNGS	Copy transmit data area	Target start/end	Source start/end	
VALM16	M-Value in TX data (int)	Target byte (start)	M-Line (source)	
VALM32	M-Value in TX data (long)	Target byte (start)	M-Line (source)	

The MAP commands can only be processed in separate lines at the end of the script table (MAP1…60). In the standard case, the areas are copied completely 1:1: RNGC 0/31 0/31 and RNGS 0/31 0/31.

12.3 Interface between script and firmware

As you can see in the block diagram, the script is a frame around the control application.

There are signals...

1.) ...which come from the hardware (inputs) and which are passed on to the script.
2.) ...those that come from the standard firmware (e.g. operating status 'READY')
3.) ...those that are transferred from the script to the positioning firmware (e.g. setpoints)
4.) ...that go from the script to the hardware outputs

From the script's point of view, 1) and 2) are input signals and 3) and 4) are output signals.

With this device, individual bits are transferred to the firmware by overwriting the fieldbus specification. If, for example, the ENABLE signals of the axes are not to come from the bus but from the script program, these bits are written to the processing area of the bus input signals using the corresponding MAP command (MAPMC).

An exception to this is the possible generation of error states in the script, in which case the results of lines SCERR1 and SCERR2 are taken over by the error processing in the module firmware.

Analog variables, i.e. the position and speed setpoints, are taken from the script lines provided for this purpose, if something is entered there. If the corresponding lines are empty, normal processing is carried out.

The same applies to the hardware outputs and LEDs; without an entry in the corresponding script line, they have the default function.

Input signal script	Meaning	Value range
PIN6	Analog input at PIN 6, 0...10V or 0...20 mA	0.0 ... 100.0 %
PIN910	Analog differential input at PIN 9/10 (-10…) 0…10V, 4…20 mA or 0… 20 mA	-100.0 ...0.0 ... 100.0 %
PIN13	Analog input at PIN 13, 0...10V or 0...20 mA	0… 100 %
PIN14	Analog input at PIN 14, 0...10V or 0...20 mA	0… 100 %
PIN7	Switching input at PIN 7	0.0 or 1.0
PIN8	Switching input at PIN 8	0.0 or 1.0
PIN5	Switching input at PIN 5	0.0 or 1.0
SSI	Input value of SSI sensor	mm, scaled w/o offset
READY	Operational readiness (output error processing)	0.0 or 1.0
U	Control signal	+/- 100.0 %
XSC	Scaled actual value position	mm
P1SC	Scaled pressure sensor 1 (PIN13)	bar
P2SC	Scaled pressure sensor 2 (PIN6)	bar

Scaling of analog signals at PIN6, PIN13, PIN14: These inputs can be set to different signal types using the corresponding SIGNAL parameter. For use in the script, only the distinction between voltage and current signals is relevant. Inversion or rescaling to 4-20 mA may need to be done in the script program.

This does not apply to analog input PIN910, which is only used in the script. Here, the set signal range is mapped to 0-100% or -100 – 100% and scaled accordingly before being transferred to the script.

If additional process variables are required, these can be read from the preparation level of the fieldbus data using the BUSRD function. If necessary, the additional output signals can be used for this purpose, to which process variables can be assigned with ‘SELPLUS’.

Output signal script	Meaning	Value range or unit
WA	Position setpoint	mm
VA	Speed setpoint specification	%
X	Current actual value position	mm
WAP	Pressure Setpoint	bar
XDP	Pseudo differential pressure	bar
PIN15	Analog output at PIN 15, 0...10V or 4...20 mA	0.0 ... 100.0
PIN16	Analog output at PIN 16, 0...10V or 4...20 mA	0.0 ... 100.0
PIN1	Switching output at PIN 1	On: Value >= 1.0
PIN2	Switching output at PIN 2	On: Value >= 1.0
LED_GN	Green LED on the front of the module	On: Value >= 1.0
LED_YM	Central yellow LED on the front of the module	On: Value >= 1.0
LED_YR	Right yellow LED on the front of the module	On: Value >= 1.0
SCERR1 / 2	Error shutdowns from the script	Error: Value >= 1.0
SNAP	Snapshot of the script variables on rising edge	On: Value >= 1.0

Generation of an error shutdown from the script program:

If you want to generate a shutdown of the module from the script program, which is to be processed like one of the other monitored error sources, the signal2 "SCERR(1/2)" can be used for this. If the content of this line yields a value >= 1.0, the SCERR error is generated, which leads to the READY message disappearing and generally also to the outputs being switched off. The error status is reset via the error processing function, as set via the SENS parameter. This means that the error status is retained even if the SCERR line is reset.

Special handling: If you want to reset the error status of this individual error directly from the script, this can be done with a value of < -1.0. In this way, the error bit disappears regardless of a rising edge at ENABLE.

Sequence of events:

To ensure delay-free signal processing, it is recommended that the parts of the script that serve as input variables for the position controller are evaluated before it is processed and the output variables are evaluated afterwards. Therefore, the lines above the dividing line are processed in a first run (incl. the M lines 51-60), the rest afterwards. All manipulations of the actual values should always take place in this area. The setpoint specification and other functions (logic, etc.) are less critical and can be split up as required.

12.4 Standard script

In the delivery state, or if the module is reset to this state via ‘DEFAULT’ or ‘SC:CLEAR’, the script is reset to the standard function of the POS-324-U. This means that all lines are empty except for the complete copy of the transfer area of the bus inputs to the processing area and from the preparation area to the transfer area of the bus outputs:

```
MAP1    RNGC    0/31        0/31
MAP2    RNGS    0/31        0/31
```

12.5 Programming software

The programming environment for script editing is included in the WPC software package (from version 4.1.2.5). With this software you can load and save the script, display it clearly and edit it comfortably. At this point, only the basic information on operation is to be given. Further information can be found in the programme documentation, see below.

12.5.1 Connect and read out data

Connect the module in the WPC and then select the menu item "Extras":

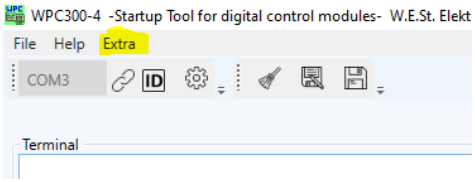

A submenu opens from which you can start the environment:

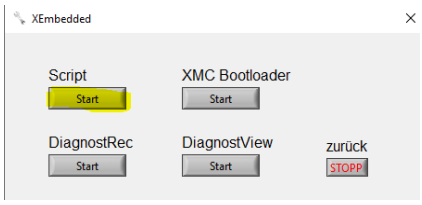

A window with these controls appears:

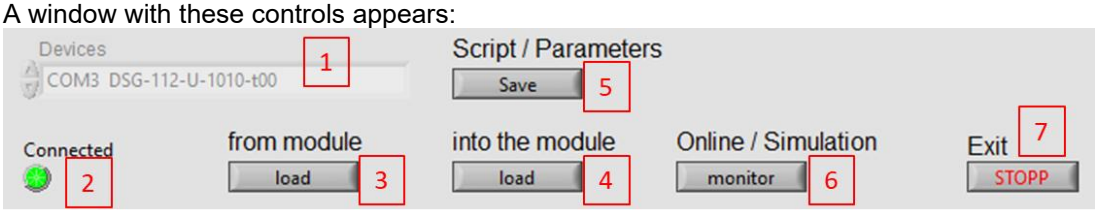

1. Display of the active connection with the module identification.
2. The green indicator confirms the successfully established connection.
3. This button reloads the current script program on the module to the editor.
4. Transfer of the script from the editor to the module. Attention: The change is effective immediately.
5. This button causes both the script and the currently set parameters to be permanently stored in the EEPROM of the unit. It corresponds to the homonymous button in the WPC-main window.
6. Activation of the observation mode (see below)
7. The sub-programme should only be terminated via this button. You return to the WPC main window and the module is automatically re-identified. This may take a short moment.

In the menu line you can also call up a comprehensive description of the script language:

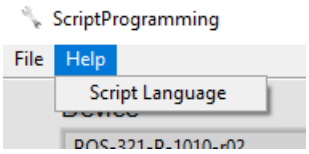

12.5.2 Load script created offline or enter script with connected module

If you want to transfer a script file from your computer to the unit, this is done in several steps:

1. Load the script from the file into the editor:

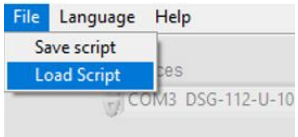

Save: Saves the displayed script table to a file

Load: Loads the script from a file into the table

2. Use button 4 (see above) to transfer the contents of the table to the unit.
   If there are faulty commands, the transmission stops at this point.

3. After successful transfer, the changed script is immediately active. You can now make further settings (e.g. parameters) and test the function. However, do not forget to permanently save the data in the non-volatile memory of the unit to complete the activities via the Save button in this software (5) or WPC.

Direct editing of a script in online mode:
After connecting a module, the data of the module definition is automatically read from the unit. As described in chapter 5, one can change the script directly in the displayed table. The context menus can also be activated accordingly via a right click. However, this is only enabled if no observation mode has been activated (see the following section). After changing, the script is loaded into the module by clicking on button 4.

12.5.3 Observation mode

The observation mode is used for commissioning and checking the script function. If one activates this mode via button 6, the current values for each line are displayed in the "Online" column of the script table (8):

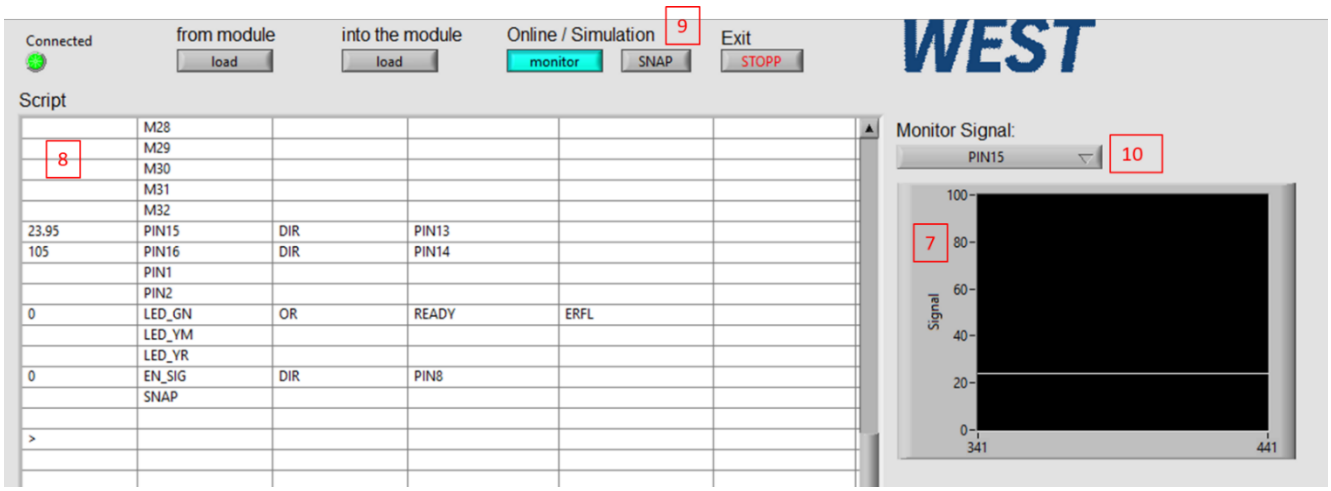

Pressing button 6 again deactivates the observation mode.

Special function possible in observation mode:

- **Parameter display and change**
  When (left)-clicking on a free parameter "PAR..." in the table, a dialogue window appears in which the current value is displayed and the possibility to change it is offered:

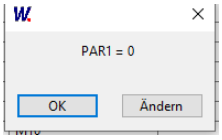

- **Signal recorder**
  In the observation mode, a strip chart (7) is visible in which the temporal course of one of the signals can be displayed. To do this, select a signal of interest via the pull-down menu 10. The scaling of the Y-axis can be changed by right-clicking on its scale: Deactivate autoscaling, then it is possible to change the lower and upper limit in the diagram by clicking directly on the value and entering a number there. The signal recorder at this point is intended as a tool for quick assessment of individual signals. If you want to record several signals, save the result, etc., the oscilloscope function in WPC is a much more comprehensive and convenient tool.

- **Snapshot**
  If you want to reconstruct the situation in case of sporadic events, it is helpful if you can create a copy of the online values at the time in question. There is a special memory cell "SNAP" for this purpose. If the value of this variable rises >= 1.0, a snapshot of the online values is saved at that time. This snapshot can be viewed by pressing the "SNAP" button (9). The snapshot is overwritten with every rising edge of the variable "SNAP" in the table. If you want to save only one state, you can enter e.g. the function RS and connect only the set input. If you select the snapshot view and find only zeros in the online column (including the SNAP line), this means that no recording has been triggered after the unit was started.

13 Profinet – Driver Blocks for Simatic-Controllers

For use within the „TIA Portal“ software we provide two driver blocks that enable a convenient access out of the application program:

a) The source WEST_UHC126U_PFN.scl for controllers of the S7-1200 and -1500 series
b) The source WEST_UHC126U_PFN_TIA_KLASSIK.scl for controllers of the S7-300 and -400 series

Below their integration in the TIA project and the interconnections are explained.

1.) Import the GSDML – file
2.) Project the connection between PLC and controller card via Profinet:

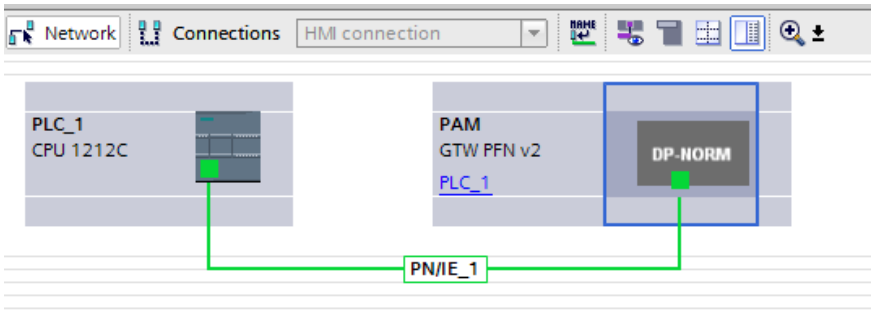

3.) Install two submodules in the device:
32 byte output data
32 byte input data

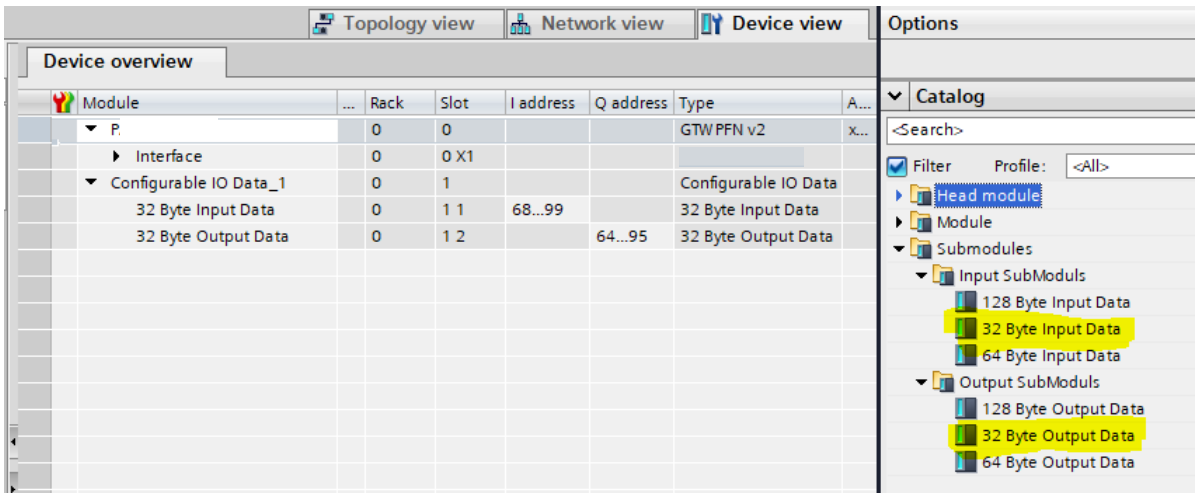

The addresses are assigned automatically. The automatically assigned hardware identifiers are also important for connecting the program module when using the S7-1200 / -1500. These can be determined by right-clicking on the two modules in the device overview and selecting the context menu item "Properties":

These numbers are different and must be noted separately for the input and output data.

If an S7-300 / -400 is used, the input and output addresses of the IN/OUT module are required.

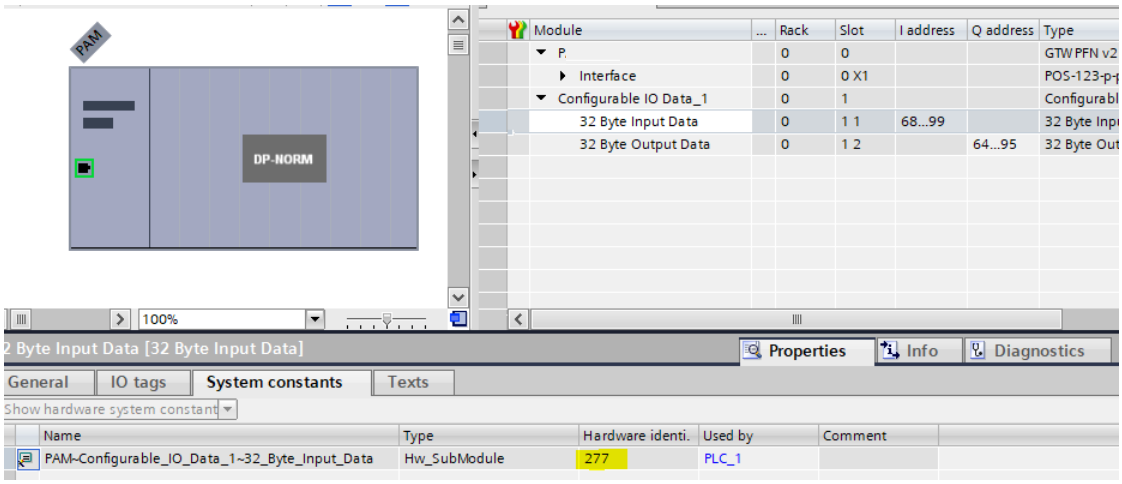

4.) The driver block is supplied as SCL – source. In order to assemble it into the project, the file has to be added to the TIA – Portal as “new external file”:

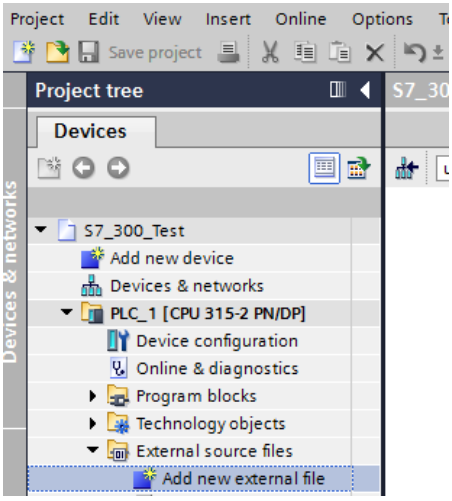

5.) Subsequently click on the imported file and chose “generate blocks from source”. After this step the driver block can be found in the “blocks” folder. Its number may differ.

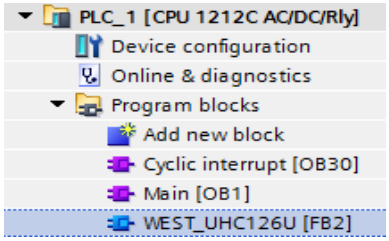

This FB can now be called out of the application program. This should happen in a cyclic interrupt with an execution time >= 4 ms.

View of the block in FUP w/o interconnection:

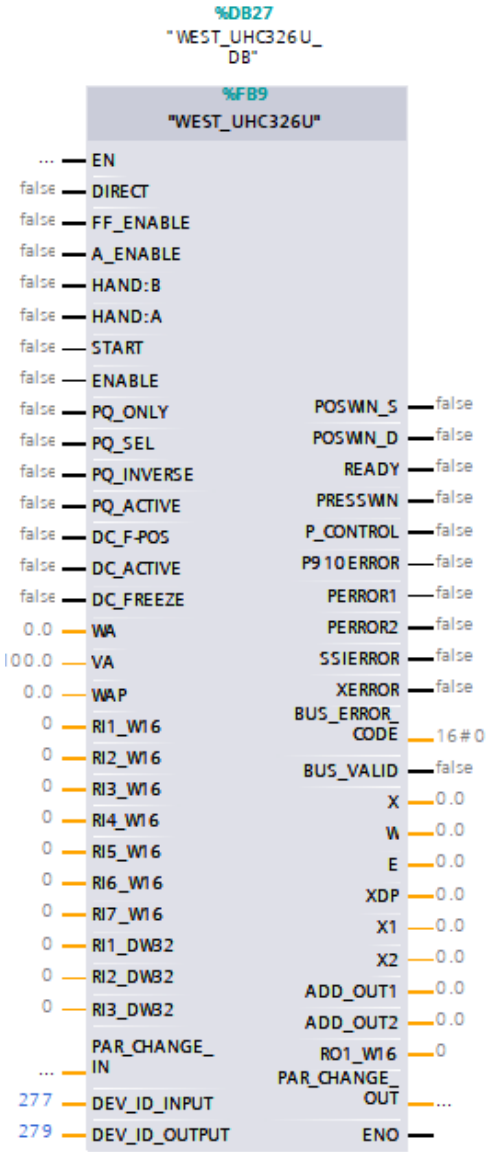

The error bits are negated in the driver before the output, i.e. for the output parameters of the block, the set status corresponds to an active error. Here you can see below the specification of the previously read HW identifiers. These must be adjusted accordingly.

Address designation for S7-300 / -400 (example):

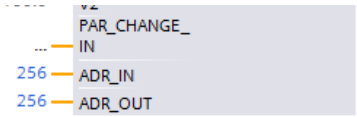

The start addresses of the input and output data are specified here, not the hardware identifiers.

The connectors of the driver block correspond as far as possible to the description in the previous chapter. The following differences have to be considered:

- Transduction of setpoint positions in the number format “real” and unit [mm]
- Transduction of the speed setpoints in the number format “real” and [%] related to the parameterized value.
- The signals allowing to change parameters are bundled in structures (usage is optional).
- As parameter „DEV_ID“ the hardware identifier of the IO Module has to be entered (TIA)
- As parameters ADR_IN / ADR_OUT the starting addresses (see HW config.) have to be entered (Step 7 classic).
- The values „PERRROR1/2“, SSIERROR, XERROR are not inverted, which mean “TRUE” indicates the presence of an error.
- The bit “BUS_VALID” signals the operation of the bus data transfer.
- Feedback of the actual positions and internal setpoints in the number format “real” and unit [mm]
- Pressure feedback in "real" format and in the unit [bar]

BUS_ERROR_CODE:

This output parameter contains various error bits of the fieldbus communication and the device in bit-coded form. In the good state, the number is "0". The meaning is as follows:

	Bit - Number	Valence (decimal)	Valence (hex.)
Data Error (DERROR)	0	1	0x01
Gateway – Error (CHK_ERROR)	2	4	0x04
Driver error when receiving data	3	8	0x08
Driver error when sending data	4	16	0x10
Livebit Error	5	32	0x20

If several errors occur at the same time, several bits are set and the number output is the sum of these.

If the bus data exchange is faulty, the feed back values are not reliable. In most cases they will be frozen in that case. If the output values are processed and used to control further functions, the valid bit has also to be considered. In case of a bus failure adequate fall-back values have to be used so that the complete system is kept in a safe state.

14 Notes