W.E.ST. Elektronik GmbH

Technical Documentation

UHC-126-U-PFN-S2
UHC-126-U-ETC-S2
UHC-126-U-PDP-S2

Axis control module with universal positioning, pressure limitation control and Fieldbus interface, special version for distributed synchronization control

View differs for PDP - version

CONTENTS

1 General information

1.1 Order number

Universal axis control module (position control and pressure control) with analog output ± 10 V differential output or 4 ... 20 mA output, SSI or analog sensor interface.

Special version of the UHC with extended functionality for use in distributed synchronization control systems.

UHC-126-U-PFN-S2 - ProfiNet interface

UHC-126-U-ETC-S2 - EtherCAT interface

UHC-126-U-PDP-S2 - Profibus-DP interface

1.2 Scope of supply

The scope of supply includes the module plus the terminal blocks which are part of the housing.
Interface cables and further parts which may be required should be ordered separately.
This documentation can be downloaded as a PDF file from www.w-e-st.de.

1.3 Accessories

WPC-300 - Start-Up-Tool (downloadable from our homepage-products/software)

Any standard cable with USB-A and USB-B connector can be used as the programming cable.

1.4 Symbols used

General information

Safety-related information

1.5 Legal notice

W.E.St. Elektronik GmbH

Gewerbering 31
D-41372 Niederkrüchten

Tel.: +49 (0)2163 577355-0
Fax.: +49 (0)2163 577355-11

Home page: www.w-e-st.de
EMAIL: contact@w-e-st.de

Datum: 21.08.2023

The data and characteristics described herein serve only to describe the product. The user is required to evaluate this data and to check suitability for the particular application. General suitability cannot be inferred from this document. We reserve the right to make technical modifications due to further development of the product described in this manual. The technical information and dimensions are non-binding. No claims may be made based on them.

1.6 Safety instructions

Please read this document and the safety instructions carefully. This document will help to define the product area of application and to put it into operation. Additional documents (WPC-300 for the start-up software) and knowledge of the application should be taken into account or be available.
General regulations and laws (depending on the country: e. g. accident prevention and environmental protection) must be complied with.

These modules are designed for hydraulic applications in open or closed-loop control circuits. Uncontrolled movements can be caused by device defects (in the hydraulic module or the components), application errors and electrical faults. Work on the drive or the electronics must only be carried out whilst the equipment is switched off and not under pressure.

This handbook describes the functions and the electrical connections for this electronic assembly. All technical documents which pertain to the system must be complied with when commissioning.

This device may only be connected and put into operation by trained specialist staff. The instruction manual must be read with care. The installation instructions and the commissioning instructions must be followed. Guarantee and liability claims are invalid if the instructions are not complied with and/or in case of incorrect installation or inappropriate use.

CAUTION!
All electronic modules are manufactured to a high quality. Malfunctions due to the failure of components cannot, however, be excluded. Despite extensive testing the same also applies for the software. If these devices are deployed in safety-relevant applications, suitable external measures must be taken to guarantee the necessary safety. The same applies for faults which affect safety. No liability can be assumed for possible damage.

Further instructions

- The module may only be operated in compliance with the national EMC regulations. It is the user's responsibility to adhere to these regulations.
- The device is only intended for use in the commercial sector.
- When not in use the module must be protected from the effects of the weather, contamination and mechanical damage.
- The module may not be used in an explosive environment.
- To ensure adequate cooling the ventilation slots must not be covered.
- The device must be disposed of in accordance with national statutory provisions.

2 Characteristics

This electronic module was developed for controlling the position and/or pressure of a hydraulic axis via the integrated fieldbus interface.

The hydraulic axis can be driven as positioning control with digital stroke measurement (SSI interface) or by analog sensors.

Additionally, an integrated pressure limitation control function for one or two pressure sensors (differential pressure) is implemented. Command signals and actual values are transmitted by a fieldbus communication interface. Feedback are status information and actual values.

Proportional valves with integrated electronics (typically control valves) can be driven by the analogue output.

Internal failure and the system statuses are monitored. The ready output is available as a fieldbus information and parallel as a hardware output.

The parameterization is performed via a USB interface in combination with our PC program WPC-300. Alternatively, defined parameters can be modified via the fieldbus interface.

Typical applications: general positioning drives, fast transport drives, handling systems, speed-controlled axes and presses with positioning and pressure control.

Features

- **Fieldbus for command values, sensor values, control word and status word**
- **SSI- or analog feedback sensors (0… 10 V or 4… 20 mA)**
- **Resolution up to 1 µm (SSI - interface)**
- **Speed resolution 0,005 mm/s**
- **Positioning mode: NC with internal profile generator**
- **Synchronised start of several axes, synchronisation monitoring, delayed start to realise a distributed synchronisation control system**
- **Alternatively continuous command signal transition**
- **Differential pressure limitation control or direct pressure control**
- **Expanded closed loop control functions:**
  - **P_{T1} filter**
  - **Drift compensation for optimal zero point adjustment**
  - **Accurate positioning by compensation of force depended positioning deviations**
  - **Feed forward to reduce the following error**
  - **Acceleration feedback by measuring the differential pressure (used to improve the dynamic behavior in case of low dynamics drives)**
- **Usable with overlapped proportional valves and with zero lapped control valves**
- **Fault diagnosis and extended function checking**
- **Simplified parameterization with WPC-300 software**

2.1 Device description

Ethernet-based fieldbus:

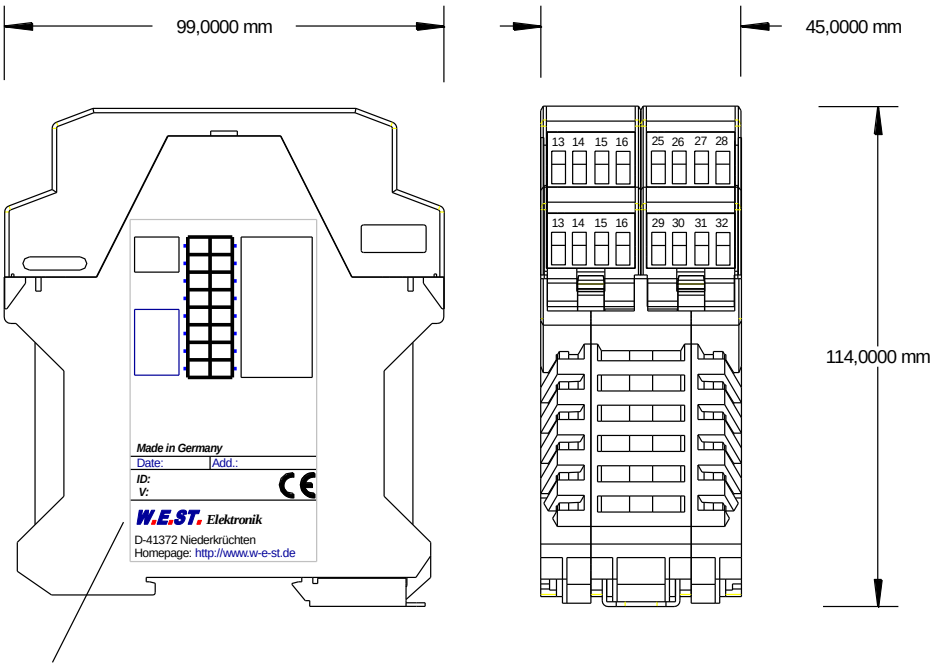

Type plate and terminal pin assignment

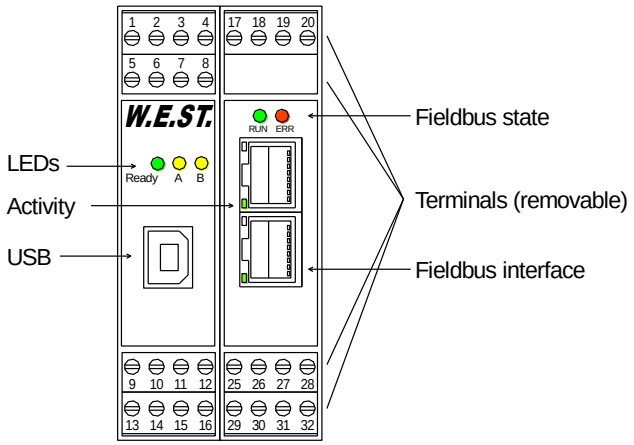

Front view Profibus-DP module:

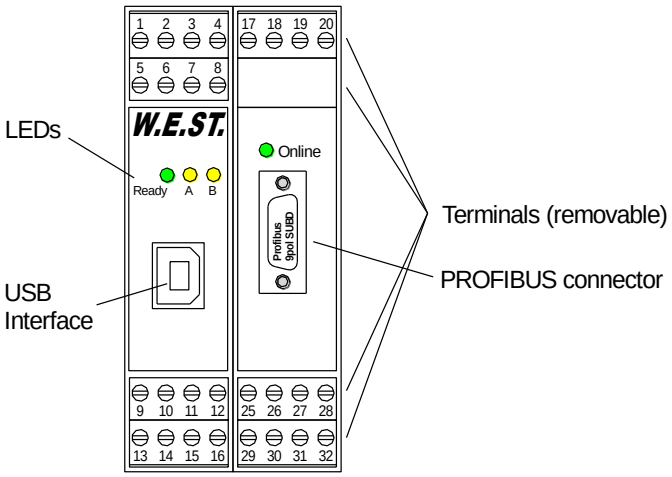

3 Use and application

3.1 Installation instructions

- This module is designed for installation in a shielded EMC housing (control cabinet). All cables which lead outside must be screened; complete screening is required. It is also necessary to avoid strong electro-magnetic interference sources being installed nearby when using our open and closed loop control modules.

- **Typical installation location:** 24 V control signal area (close to PLC)
  The devices must be arranged in the control cabinet so that the power section and the signal section are separate from each other.
  Experience shows that the installation place close to the PLC (24 V area) is most suitable. All digital and analogue inputs and outputs are fitted with filters and surge absorbers in the device.

- The module should be installed and wired in accordance with the documentation bearing in mind EMC principles. If other consumers are operated with the same power supply, a star-shaped ground wiring scheme is recommended. The following points must be observed when wiring:
  - The signal cables must be laid separately from power cables.
  - Analogue signal cables **must be screened**.
  - All other cables must be screened if there are powerful interference sources (frequency converters, power contactors) and cable lengths > 3 m. Inexpensive SMD ferrites can be used with high-frequency radiation.
  - The screening should be connected to PE (PE terminal) as close to the module as possible. The local requirements for screening must be taken into account in all cases. The screening should be connected to at both ends. Equipotential bonding must be provided where there are differences between the connected electrical components.
  - If having longer lengths of cable (> 10 m), the diameters and screening measures should be checked by specialists (e. g. for possible interference, noise sources and voltage drop). Special care is required if using cables of over 40 m in length, and the manufacturer should be consulted if necessary.

- A low-resistance connection between PE and the mounting rail should be provided. Transient interference is transmitted from the module directly to the mounting rail and from there to the local earth.

- Power should be supplied by a regulated power supply unit (typically a PELV system complying with IEC364-4-4, secure low voltage). The low internal resistance of regulated power supplies gives better interference voltage dissipation, which improves the signal quality of high-resolution sensors in particular. Switched inductances (relays and valve coils) which are connected to the same power supply must <u>always</u> be provided with appropriate overvoltage protection directly at the coil.

3.2 Typical system structure

This minimal system consists of the following components:

(*1) Proportional valve with integrated electronics
(*2) Drive (e.g. hydraulic cylinder)
(*3) Sensors for position (SSI or analog) and pressure
(*4) UHC-126-U-***-S2 control module
(*5) Interface to PLC

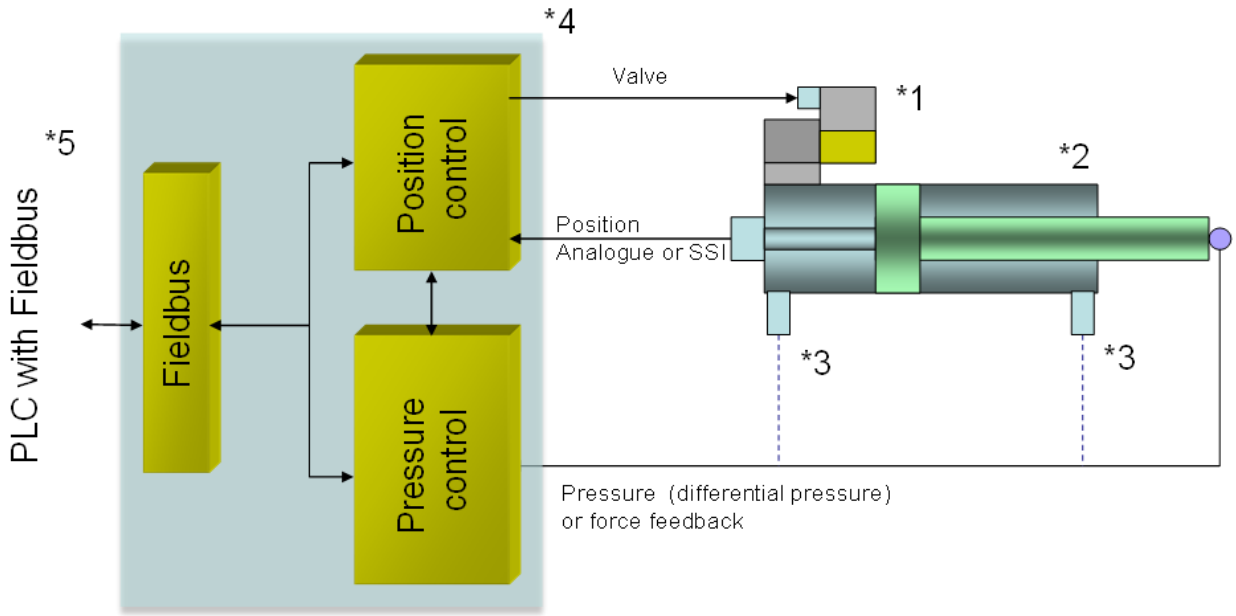

3.3 Method of operation

Positioning control plus pressure control

General information

This module is a combined system of position control and pressure control. The standard communication via fieldbus simplifies the wiring. The UHC-126-U can be used as a universal axis controller for hydraulic drives. Because of a second position and a second velocity, it is optionally possible to drive to target position with the corresponding speed (rapid traverse and creeping speed respectively creeping speed and rapid traverse)

Positioning: Similar to our standard positioning modules, the axis can be used as point to point controller (stroke depended deceleration) as well as in NC mode. With only a few parameters the controller can be optimized, the movement profile is preset via Fieldbus (position and velocity).

Optional additional function: motion profile with second speed

This function is not to be used in distributed synchronous operation.

Because of the input of a second position and speed, the axis can be driven to this position with the second velocity. This mode is only activated when the velocity command value V2 is not equal to zero.

The following features have to be noticed:

- The position command value (P2) is the end position that is approached with the velocity (V2).
- The position setpoint (P1) is the switching position, which is approached with the speed (V1) and then switched over to the speed (V2).
- The speed is switched via the speed ramp (in NC mode via the acceleration).
- If the position setpoint (P2) is between the feedback value and the position setpoint (P1) (P1 and P2 are reversed), the position (P2) is started at speed (V1).

The following illustrations show two possible speed profiles, which result depending on the choice of speed V2 in relation to V1:

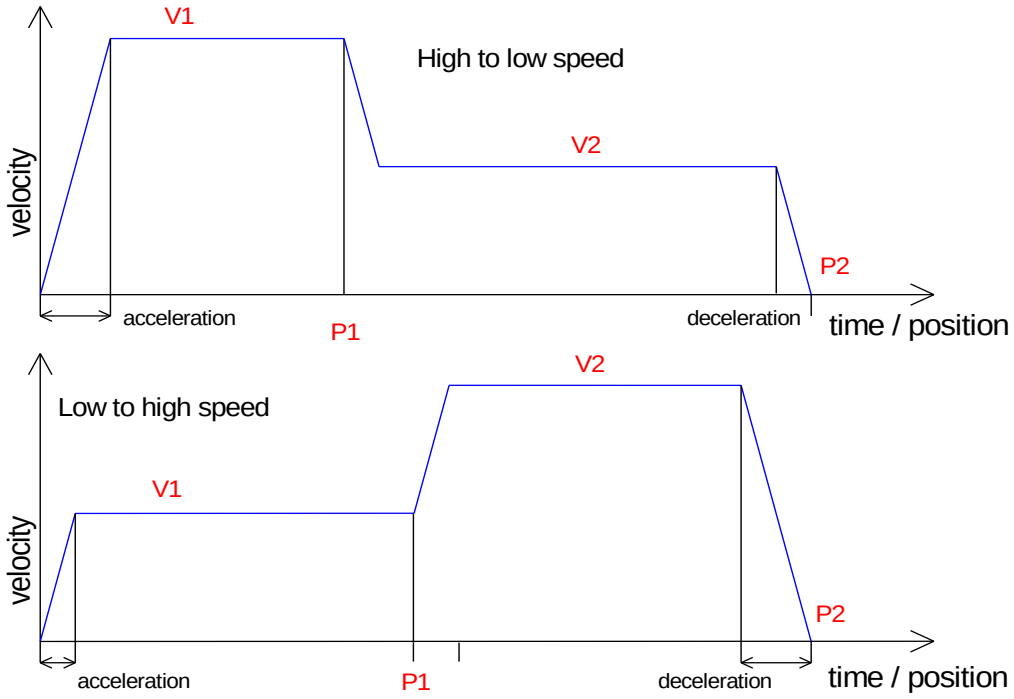

Influences on positioning accuracy:

The positioning accuracy is determined by the hydraulic and mechanical conditions. The right choice of valve is therefore a decisive factor. In addition, two mutually contradictory requirements (short position time and high accuracy) must be taken into account when designing the system.
The electronic limitations lie mainly in the resolution of the analogue signals, although a resolution of < 0,01 % only needs to be considered for our modules with long positions. In addition, the linearity of the individual signal points (PLC, sensor and control module) must be taken into account.

It is generally recommended to calculate the static and dynamic behavior of the hydraulic axis. For supporting this, following technical basic data are required:

- minimum natural frequency of the cylinder,
- maximum theoretical speed for extending and retracting,
- valve characteristics (natural frequency, overlapped or zero lapped, hysteresis and the flow gain (flow and pressure drop),
- system pressure, maximum pump flow,
- a description of the general system requirements.

Pressure closed loop control

The pressure control is designed as a pressure limitation control, as required for typical press applications, for example. If the feedback pressure is higher than the command pressure, the pressure controller takes over the control of the axis. This kind of control is typically used in metal forming applications. The behavior of the pressure closed loop control is adjustable by an optimized PID compensator. Two different setups can be selected over the fieldbus. Optionally, the pressure control function can be used without the position controller.

3.4 Commissioning

Step	Task
Installation	Install the device in accordance with the circuit diagram. Ensure it is wired correctly and the signals are well shielded. The device must be installed in a protective housing (control cabinet or similar). The wiring to the fieldbus interface is done by appropriate cables.
Switching on for the first time	Ensure that no unwanted movement is possible in the drive (e. g. switch off the hydraulics).
Setting up communication	Once the power input is correct, the PC (notebook) should be connected to the serial interface. Please see the WPC-300 program documentation for how to set up the communication. Further commissioning and diagnosis are supported by the operating software.
Pre-parameterization	Now set up the following parameters (with reference to the system design and circuit diagrams): - The SYSTEM data, INPUT sensor settings, control parameter and OUTPUT parameters. Pre-parameterization is necessary to minimize the risk of uncontrolled movements. - Reduce the speed limitation to a value which is uncritical for the application.
Fieldbus Communication	By selecting the device driver, the IP address of the device and the configuration file, the communication can now be operated to the device. At the corresponding positions setpoints and control bits can now be sent and actual values and status bits are read back. Read the description of the interface in a separate chapter.
Remote Control	If there is no bus communication available at the beginning of the commissioning, the axis can be operated solely via the WPC program. In the monitor window, the “Remote Control” mode can be activated. Then it is possible to enter a speed value and move the axis using the manual signals or to enter a position set-point and to activate the position controller by setting the “Start”-signal. ***CAUTION!*** WPC will take over complete control in this state. The hardware-enable signal at PIN 8 and the bus interface are inoperable in this case.
Control signal	Check the control signal with a current- or voltmeter. **Voltages**: The differential output (PIN 15 minus PIN16) lies in the range of ± 10 V. **Current**: PIN 15 is used for 4… 20 mA (12 mA for 0 % of the control signal). An alternative output signal (in case of not READY) can be defined by the EOUT command.
Switching on the hydraulics	The hydraulics can now be switched on. Since the module is not yet generating a signal, the drive should be at a standstill or drift slightly (leave its position at a slow speed).
Activating ENABLE	***CAUTION!*** The drive can now leave its position and move to an end position at full speed. Take safety measures to prevent personal injury and damage. Both hardware ENABLE and software ENABLE (over the fieldbus) have to be activated. Outputs and failure processing are active. The drive stays (closed loop controlled) in the current position. If the drive moves to an end position, the polarity is probably wrong.
Speed demand	The speed is sent by the fieldbus. At zero speed, no movement is possible.
Manual (HAND) operation	If START is disabled, the axis can be moved manually with HAND+ or HAND-. After disabling the HAND signal, the axis stops closed loop controlled at the current position. The axis can also be driven without a sensor signal.
Activating START	With the start signal the demand value input is accepted and the axis moves to the target position. If START is disabled, the axis stops in the preset deceleration distance D:S.
Optimize controller	Now optimize the control parameters according to your application and your requirements.

4 Technical description

4.1 Input and output signals

Connection	Supply
PIN 3	Power supply (see technical data)
PIN 4	0 V (GND) connection.
PIN 19	Power supply Fieldbus and SSI-interface (see technical data)
PIN 20	0 V (GND)
Connection	**Analog signals**
PIN 6	Actual pressure (X2), range 0… 10 V or 4… 20 mA, scalable (SIGNAL:X2)
PIN 13	Actual pressure (X1), range 0… 10 V or 4… 20 mA, scalable (SIGNAL:X1)
PIN 14	Actual position (X), range 0… 10 V or 4… 20 mA, scalable (SIGNAL:X)
PIN 11 / PIN 12	0 v (GND) connection for the analogue signals
PIN 15 / 16 PIN 15 / 12	Control output, range: +/- 10 V (differential output) or PIN 15: 4… 12… 20 mA Type of signal and polarity can be selected by the parameter SIGNAL:U.
Connection	**SSI interface**
PIN 25	CLK+ output
PIN 26	CLK- output
PIN 27	DATA+ input
PIN 28	DATA- input
PIN 31	Power supply output 24 V
PIN 32	Power supply output 0 V
Connection	**Digital inputs and outputs**
PIN 8	**Enable input:** Hardware ENABLE (has to be activated together with fieldbus ENABLE)
PIN 7	**Synchronisation - Start input:** Start of a positioning process in the distributed synchronisation system
Connection	**Digital inputs and outputs**
PIN 1	**READY output:** **ON:** The module is enabled; there are no discernible errors. **OFF:** Enable (PIN 8 or Fieldbus bit) is deactivated or an error (sensor error or internal error) has been detected (depending on the SENS command). Also linked to the internal synchronisation monitoring, if activated.
PIN 2	**Synchronisation - Start output:** Output of the start command received via the bus for all connected axes.

4.2 LED definitions

4.2.1 First section (with USB)

LEDs	Description of the LED function
GREEN	Identical to the READY output except for the error indication. **OFF:** No power supply or ENABLE is not activated **ON:** System is ready for operation **Flashing:** Error discovered Only active when SENS = ON
YELLOW A	**OFF:** The axis is outside the INPOS window. **ON:** The axis is within the INPOS window.
GREEN + YELLOW A+B	1. **Chasing light (over all LEDs):** The bootloader is active. No normal functions are possible. 2. **All LEDs flash shortly every 6 s:** An internal data error was detected and corrected automatically! The module still works regularly. To acknowledge the error the module has to be cycle powered.
YELLOW A + YELLOW B	**Both yellow LEDs flash alternately every 1 s:** The nonvolatile stored parameters are inconsistent! To acknowledge the error, the data have to be saved with the SAVE command or the corresponding button in the WPC.

4.2.2 **Second section (Ethernet Fieldbus)**

LEDs	Description of the LED function
GREEN at the ports	Green LEDs shows network traffic at the relating port. **OFF:** No connection available **ON:** Active network connected **Flashing:** Existing data traffic
GREEN	The green RUN LED indicates the status of the central communication processor. **OFF:** Bus not started / Initializing **Flashing:** Status EtherCAT: Safe Operational Status ProfiNet: wait for data **Flickering:** Status EtherCAT: - Status ProfiNet: Failure **ON:** Connected and active
RED	The red ERR LED indicates a faillure state. **OFF:** No Error. **Flashing:** EtherCAT: No communication (PLC-Faiilure, lost frames) ProfiNet: Node flash test **ON:** ProfiNet: Failure in the data communication

4.2.3 **Second section (Profibus-DP)**

The diagnostics LED on the 2nd section indicates online operation on a Profibus system.

4.3 Block diagram

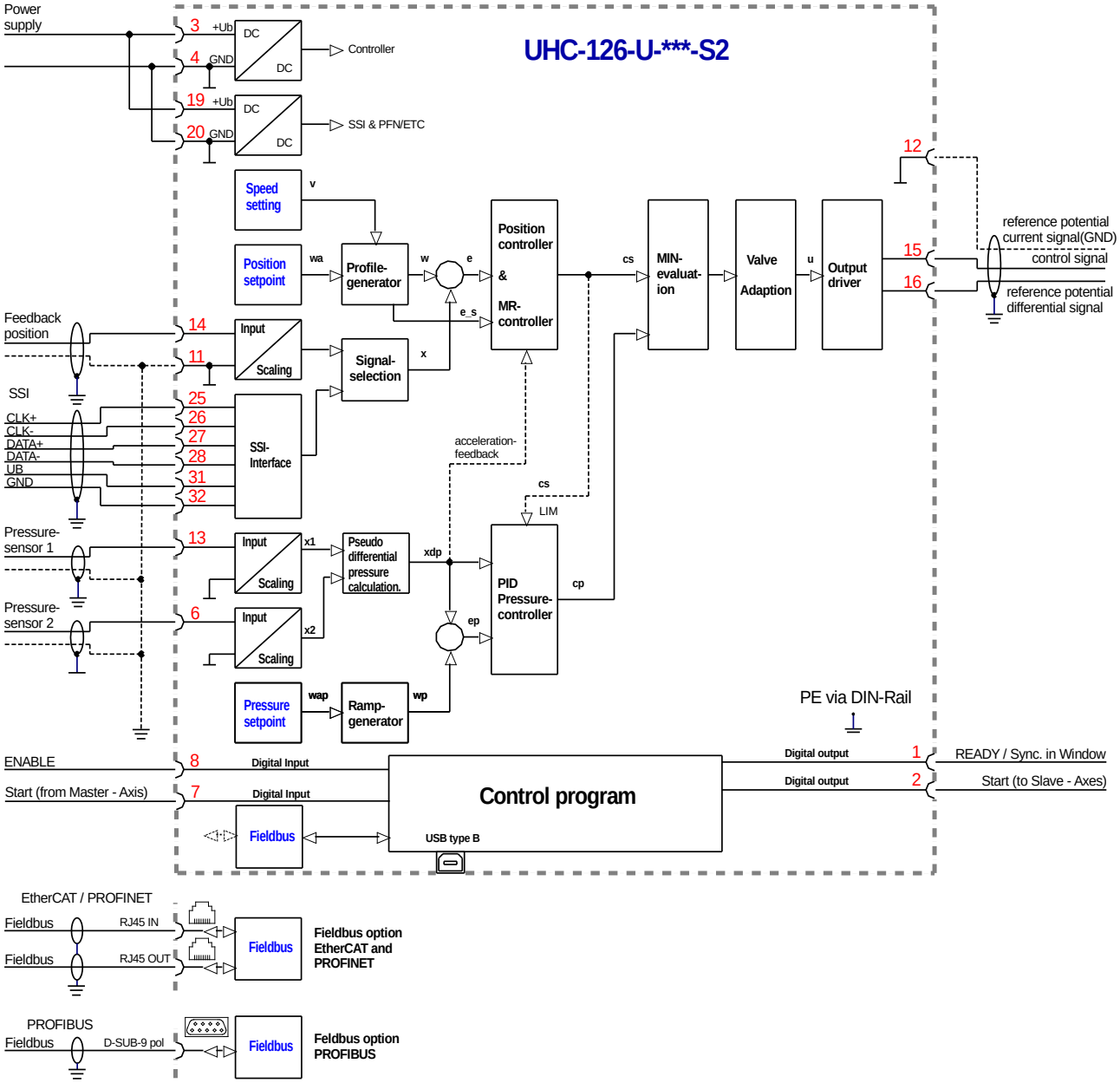

4.4 Typical wiring

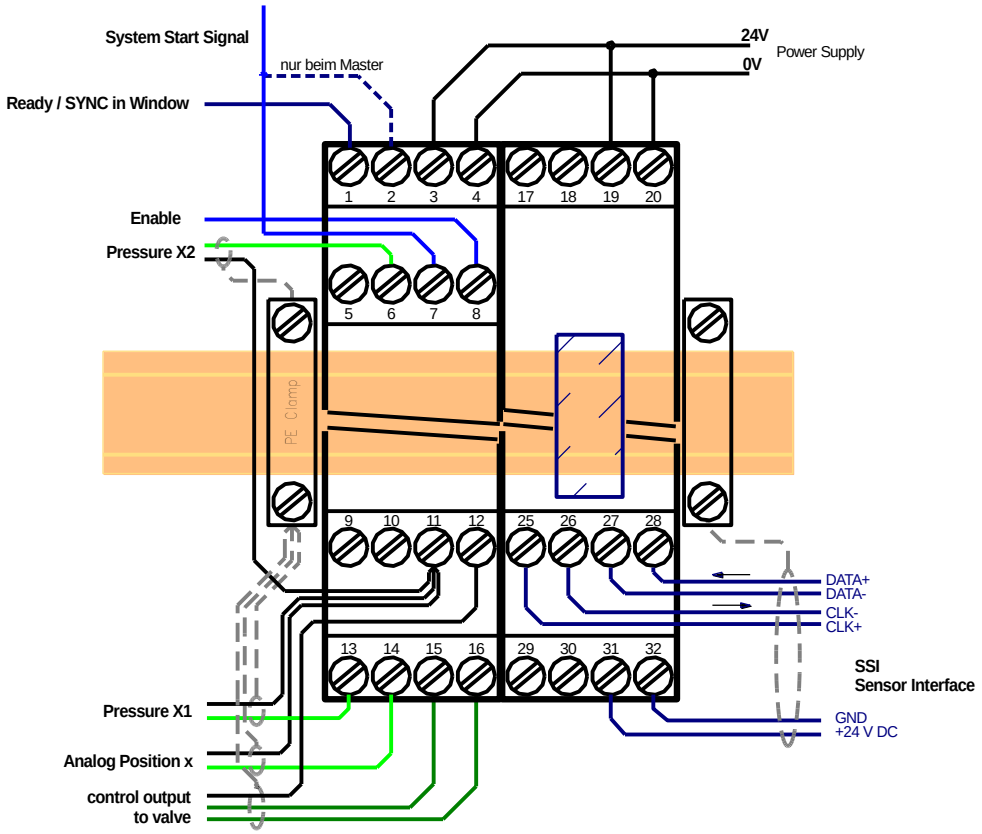

4.5 Connection examples

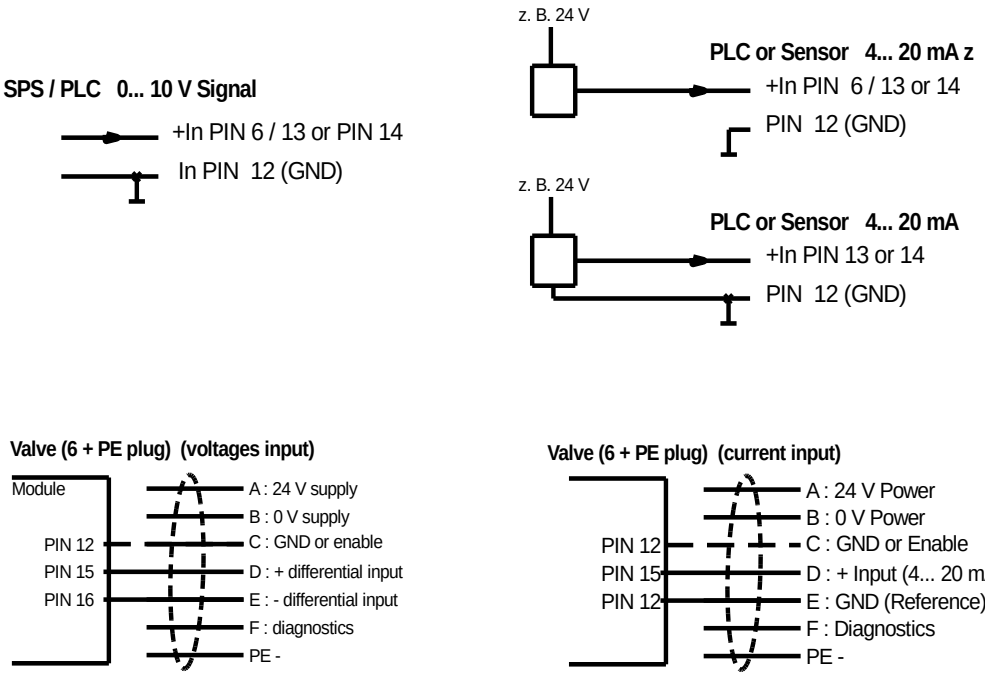

4.6 Technical data

Supply voltage (U_b) Power consumption External protection	**[VDC]** **[W]** **[A]**	24 (±10 %) max. 5.5 without sensor supply 1 medium time lag
Digital inputs OFF ON Input resistance	 **[V]** **[V]** **[kOhm]**	 < 2 > 10 25
Digital outputs OFF ON Maximum output current	 **[V]** **[V]** **[mA]**	 < 2 max. U_b 50
Analogue inputs Voltage Input resistance Signal resolution Current Load Signal resolution	 **[V]** **[kOhm]** **[%]** **[mA]** **[Ohm]** **[%]**	Unipolar 0… 10 min. 25 0.003 incl. Oversampling 4… 20 240 Ohm 0.006 incl. Oversampling
Analogue outputs Voltage Maximum load Current Maximum load Signal resolution	 **[V]** **[mA]** **[mA]** **[Ohm]** **[%]**	 0… 10, +/- 10 differential 10 4… 20 390 0.007
SSI-interface Data rate	 **[kbit/s]**	RS-422 specification 120
Controller sample time	**[ms]**	1
Serial Interface Data rate	**-** **[kBaud]**	USB - virtuel COM Port 9.6… 115.2
Profinet IO Data rate Conformance class	 **[Mbit/s]** **-**	 100 CC-B
Profibus DP interface Data rate ID-number	 **[kbit/s]**	 9.6,19.2, 93.75, 187.5, 500, 1500, 3000, 6000, 12000 1810h
Housing Material Flammability class	 **-** **-**	Snap-On Modul nach EN 50022 Polyamid PA 6.6 V0 (UL94)
Weight UHC-126-U-PFN-S2 UHC-126-U-ETC-S2 UHC-126-U-PDP-S2	 **[kg]**	 0.290 0.290 0.310

Protection class Temperature range Storage temperature Humidity	 **[°C]** **[°C]** **[%]**	IP20 -20… 60 -20… 70 < 95 (non-condensing)
Connections Communication Plug connectors PE Fieldbus	**-**	 USB type B 7 x 4-pole terminal blocks via the DIN mounting rail RJ45 IN OUT or D-Sub 9 pol. (Profibus)
EMC	**-**	EN61000-6-4: 2007 +A1:2011 EN61000-6-2: 2005

5 Parameters

5.1 Parameter overview

Group	Command	Default	Unit	Description
Basic parameters				
	MODE	---	-	Parameter view
System (MODE = SYSTEM)				
	LG	EN	-	Changing language help texts
	SENS	ON	-	Malfunction monitor
	EOUT	0	0.01 %	Output signal if not ready
	PASSFB	0	-	Password for fieldbus parameterization
	PBADR	126	-	Profibus device address
	HAND:A HAND:B	3330 -3330	0.01 % 0.01 %	Output signal in manual mode
	VMODE	SDD	-	Method of positioning
	POSWIN:S POSWIN:D	200 200	µm µm	Ranges of the in-position monitoring
	PRESSWIN	2000	µm	Control window for pressure monitoring
Input / Output Signals (MODE = IO_CONF)				
Analog position sensor scaling, system range				
	SYS_RANGE	100	mm	Axis working stroke
	SELECT:X	SSI	-	Sensor selection
	SIGNAL:X	U0-10	-	Type of the sensor signal (if the analog input is used)
	N_RANGE:X	100	mm	Nominal range
	OFFSET:X	0	µm	Offset value
SSI position sensor				
	SSI:POL	+	-	Polarity
	SSI:RES	100	10 nm	Resolution of the sensor
	SSI:BITS	24	-	Number of data bits
	SSI:CODE	GRAY	-	Code
	SSI:ERRBIT	0	-	Position of the error bit
Pressure sensor scaling, system pressure range				
	PS_RANGE	100	bar	System pressure
	SIGNAL:X1	U0-10	-	Type of the sensor
	N_RANGE:X1	100	bar	Nominal pressure of the sensor
	SIGNAL:X2	OFF	-	Type of the sensor
	N_RANGE:X2	100	bar	Nominal pressure of the sensor
Output				
	SIGNAL:U	U+-10	-	Type and polarity of the analog output

Position controller (MODE = POSITION)			
ACCEL	250	mm/s²	Acceleration
VMAX	50	mm/s	Maximum speed
V0:RES	1	1/s	Can be used to change the resolution
V0:A **V0:B**	20 20	1/s 1/s	Closed loop gain without acceleration feedback
Further settings, output adaption			
PT1	0	ms	PT1 time constant
CTRL	SQRT1	-	Control characteristics
MIN:A **MIN:B**	0 0	0.01 % 0.01 %	Deadband compensation or flow characteristic linearization
MAX:A **MAX:B**	10000 10000	0.01 % 0.01 %	Output scaling
TRIGGER	200	0.01 %	Trigger point of MIN parameter
OFFSET	0	0.01 %	Output offset value
Pressure control (MODE = PRESSURE)			
Ramps, Offset			
RA:UP **RA:DOWN**	100 100	ms ms	Ramp times for the pressure setpoint
P_OFFSET	0	mbar	Pressure offset, is added to the actual value
ARATIO	1000	-	Area ratio of the cylinder
Parameter Set 1			
C1:P	50	0,01	P Gain
C1:I	4000	0,1 ms	I Gain, reset time
C1:D	0	0,1 ms	D Gain, derivative time
C1:D_T1	10	0,1 ms	D filter
C1:I_ACT	0	0,01 %	Integrator activation threshold
Parameter Set 2			
C2:P	50	0,01	P Gain
C2:I	4000	0,1 ms	I Gain, reset time
C2:D	0	0,1 ms	D Gain, derivative time
C2:D_T1	10	0,1 ms	D filter
C2:I_ACT	0	0,01 %	Integrator activation threshold

Special function (MODE = EXTRA)			
Feedforward			
FF:A	0	-	Feed forward control gain factors
FF:B	0	-	
Acceleration feedback[1]			
AFC:P	0	0,01	Acceleration feedback (Gain and filter time)
AFC:T1	10	ms	
AFC_VO:A	20	1/s	Closed loop gain with acceleration feedback
AFC_V0:B	20	1/s	
MR controller			
MR:T1	20	ms	filter constants of the MR-controller
MR:T2	20	ms	
Synchronisation Monitoring			
SYNCWIN	0	0,01 mm	Monitoring window for EMR
Drift compensation, fine positioning			
DC:AV	0	0,01 %	point of activation
DC:DV	0	0,01 %	point of deactivation
DC:I	2000	ms	reset time of the integrator
DC:CR	500	0,01 %	output limit
Additionally transmitted bus signals			
SELPLUS:1	-	-	Selection of additional signal 1
SELPLUS:2	-	-	Selection of additional signal 2
Integrator Limitation (Pressure Controller)			
CP:I_ULIM	10000	0,01 %	Upper integrator limit
CP:I_LLIM	-10000	0,01 %	Lower integrator limit
Behavior of the profile generator when the pressure controller is active			
PROFSTOP	OFF	-	Stop the profile generator
Special commands			
AINMODE	EASY	-	Input scaling mode
AIN_1:X	A: 1000	-	Free scaling of the analogue inputs (MATH).
AIN_2:X	B: 1000	-	
	C: 0	0,01 %	Please contact W.E.St. before using this option.
	X: V	-	
ETC_LOOP	NORMAL	-	Cycle time of data transfer. Only available on EtherCAT devices!
MR	OFF	-	Activation of the MR controller via a command.
ACA:CYCLE	0	ms	Square-wave generator[1]: cycle time
ACA:POS1	25	mm	Lower switching position
ACA:POS2	175	mm	Upper switching position
PCTRLOLD	OFF	-	Compatibility mode pressure controller tracking
DIAG	-	-	Query of the last switch-off causes
SSI:BITMASK	0	-	Masking out bits from the SSI telegram
NEGW	OFF	-	Release of negative position setpoints

[1] Note: This function and the associated parameters are not available in the EtherCAT variant.

5.2 Basic Parameters

5.2.1 MODE (Switching between parameter groups)

Command	Parameters	Unit	Group
MODE x	x= SYSTEM|IO_CONF|POSITION| PRESSURE|EXTRA|ALL	-	**BASICS**

This command is changing the different parameter groups.

--- No group is displayed (default)
SYSTEM System data
IO_CONF Definition of the in- and output signals
POSITION Parameters of the position controller
PRESSURE Parameters of the pressure controller
EXTRA Special functions
ALL All parameters are listed

5.3 System Parameters

5.3.1 LG (Changing the language)

Command	Parameters	Unit	Group
LG x	x= DE|EN	-	**SYSTEM**

Either German or English can be selected for the help texts.

5.3.2 SENS (Monitoring of the module functions)

Command	Parameters	Unit	Group
SENS x	x= ON|OFF|AUTO	-	**SYSTEM**

This command is used to activate/deactivate the monitoring functions (4… 20 mA sensors, output current, signal range and internal failures) of the module.

ON: All monitoring functions are active. Detected failures can be reset by deactivating the ENABLE input.

OFF: No monitoring function is active.

AUTO: AUTO RESET mode. All monitoring functions are active. If the failure doesn't exist anymore, the module automatically resumes to work.

Normally the monitoring functions are always active because otherwise no errors are detectable via the READY output. Deactivating is possible mainly for troubleshooting.

5.3.3 EOUT (Output signal if READY = OFF)

Command	Parameters	Unit	Group
EOUT x	x= -10000… 10000	0,01 %	**SYSTEM**

Output value in case of a detected error or a deactivated ENABLE input. This function can be used if the drive has to be moved to one of the two end positions (with defined speed).

|EOUT| = 0 The output is switched off in the event of an error. This is normal behavior.

CAUTION! If the output signal is 4… 20 mA, the output is switched off when **|EOUT| = 0**. If a null value = 12 mA is to be output in the event of an error, EOUT must be set to 1[2].

The output value defined here is stored permanently (independent from the parameter set). The effects should be analyzed by the user for each application from the point of view of safety.

Do not use the manual mode in conjunction with the EOUT command. After deactivation of the HAND input, the output is set to the EOUT value.

5.3.4 PASSFB (Password fieldbus)

Command	Parameters	Unit	Group
PASSFB x	x= 0… 10000000	-	**SYSTEM**

The value entered here serves as password for the parameterizing via fieldbus. For enabling parametrization it has to be send via fieldbus to the relating address. For a value of “0” the password protection is deactivated.

5.3.5 PBADR (Profibus address)

Command	Parameters	Unit	Group
PBADR x	x= 1… 126	-	**SYSTEM**

This command is used to change the address of the module.

The PBADR must be 126 if an external address change (over the Profibus) should be supported.

[2] This is necessary if using valves without error detection for signals lower than 4 mA. If the valve has an internal error detection, it moves into a defined position after switching off the output.

5.3.6 HAND (Manual speed)

Command	Parameters	Unit	Group
HAND:i x	i= A|B x= -10000… 10000	 0,01%	**SYSTEM**

The manual speeds are set with these parameters. The drive moves in a controlled manner in the defined direction when the manual signal is active. The direction is defined by the sign of the parameters. After the manual signal has been disabled, the drive remains under control in the current position.

In case of a fault (position sensor fault), the drive can still be moved with this manual function. The output will be switched off when the hand signals are turned off.

The manual speed is also limited by the external speed demand imposed through the fieldbus (MIN evaluation).

Caution! Do not use the manual mode in conjunction with the EOUT command in case of errors. After deactivation of the HAND input, the output is reset to the EOUT value.

5.3.7 POSWIN:S (In-position monitoring)

5.3.8 POSWIN:D (Dynamic position monitoring)

Command	Parameters	Unit	Group
POSWIN:S x POSWIN:D x	x= 2… 200000 x= 2… 200000	µm µm	**SYSTEM**

This parameter is entered in µm.
The POSWIN command defines a range for which the INPOS message is generated. This function monitors the failure between the command and actual position. The positioning process is not influenced by this function.

START must be activated to generate the INPOS messages.

POSWIN:S Standard InPos signal

POSWIN:D Dynamic InPos signal to monitor the following error in case of NC mode[3]

[3] The INPOS:D should always be higher than the INPOS:S. Alternatively two different INPOS windows are definable.

5.3.9 PRESSWIN (Pressure window)

Command	Parameters	Unit	Group
PRESSWIN x	x= 100… 50000	mbar	**SYSTEM**

This parameter is entered in mbar.

The PRESSWIN command defines a range for which the signal is generated. This function monitors the deviation between command value and actual value.

5.4 Input and output configuration

5.4.1 SYS_RANGE (Working stroke)

Command	Parameters	Unit	Group
SYS_RANGE x	**x= 10… 10000**	**mm**	**IO_CONFIG**

This command defines the full stroke, which corresponds to 100 % of the input signal. If the demand is set incorrectly, this leads to incorrect system settings, and the dependent parameters such as speed and gain cannot be calculated correctly.

5.4.2 SELECT:X (Position sensor type)

Command	Parameters	Unit	Group
SELECT:X x	x= ANA|SSI		**IO_CONFIG**

The employed sensor type for position measurement can be chosen with this command.

ANA: The analog sensor interface (0… 10 V or 4… 20 mA) is active.

SSI: The SSI sensor interface is active. The input is matched to the sensor with the SSI commands. The relevant sensor data must be available.

5.4.3 SIGNAL X (Type of input signal)

Command	Parameters	Unit	Group
SIGNAL:I x	i= X x= OFF|U0-10|I4-20| U10-0| I20-4	-	**IO_CONFIG**

This command defines the type of input signal (current or voltage). Simultaneously the signal direction can be reversed. In OFF mode, the analog input is deactivated.

5.4.4 N_RANGE:X (Nominal range of the sensor)

Command	Parameters	Unit	Group
N_RANGE:X x	x= 10… 10000	mm	**IO_CONFIG**

N_RANGE (nominal range or nominal stroke) is used to define the length of the sensor. This value should usually be equal or higher than SYS_RANGE.

5.4.5 OFFSET:X (Sensor offset)

Command	Parameters	Unit	Group
OFFSET:X x	x= -10000000… 10000000	µm	**IO_CONFIG**

Adjustment of the zero point of the sensor.

5.4.6 Using of the commands SYS_RANGE, N_RANGE:X and OFFSET:X

The application scaling will be done by these three commands. In this example the system is defined by a length of 120 mm of the sensor, a working stroke of 100 mm of the cylinder and an offset of 5 mm. These parameters have to be typed in and the axis is driving between 5 mm and 105 mm of the sensor stroke and between 0 mm and 100 mm of the cylinder stroke.

Correct scaling:

SYS_RANGE = 100 (mm)
N_RANGE:X = 120 (mm)
OFFSET:X = -5000 (µm)

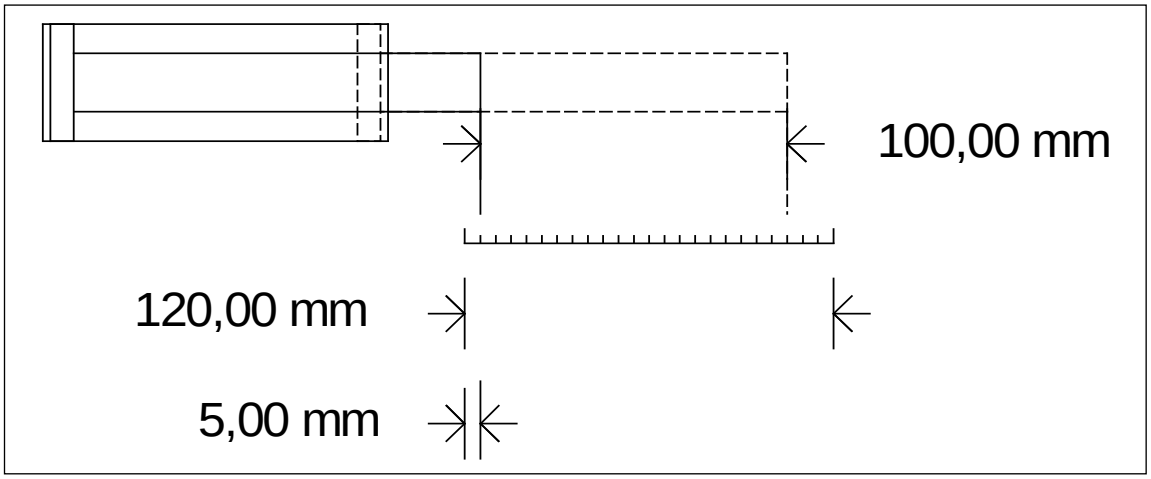

Figure 1 (Input scaling of the sensor)

5.4.7 SSI:POL (Signal direction)

Command	Parameters	Unit	Group
SSI:POL x	x= +|-	-	**IO_CONFIG**

This command serves to reverse the sensor's working direction.

5.4.8 SSI:RES (Signal resolution)

Command	Parameters	Unit	Group
SSI:RES x	x= 10… 10000	0,01 µm	**IO_CONFIG**

The sensor signal resolution is defined with this parameter. Data is entered with the resolution of 10 nm (nanometer or 0,01 µm). This means that a value of 100 defines a sensor with 1 µm resolution. This also makes it possible to scale rotational sensors.
The appropriate data can be found in the sensor data sheet.

5.4.9 SSI:BITS (Number of data bits)

Command	Parameters	Unit	Group
SSI:BITS x	x= 8… 31	bit	**IO_CONFIG**

The number of data bits is entered with this parameter.
The appropriate data can be found in the sensor data sheet.

5.4.10 SSI:CODE (Signal coding)

Command	Parameters	Unit	Group
SSI:CODE x	x= GRAY|BIN	-	**IO_CONFIG**

The data coding is entered with this parameter.
The appropriate data can be found in the sensor data sheet.

5.4.11 SSI:ERRBIT (Position of the “out of range” bit)

Command	Parameters	Unit	Group
SSI:ERRBIT X	x= 0… 31	bit	**IO_CONFIG**

The position of the error bit will be defined by this parameter.
The appropriate data can be found in the sensor data sheet.
In case of no error bit, the default value is 0.

5.4.12 PS_RANGE (System pressure)

Command	Parameters	Unit	Group
PS_RANGE X	x= 10… 1000	bar	**IO_CONFIG**

This command defines the pressure which corresponds to 100 % of the input signal. If the demand is set incorrectly, this leads to incorrect system settings, and the dependent parameters cannot be calculated correctly.

5.4.13 N_RANGE X1/X2 (Nominal range of the pressure sensors)

Command	Parameters	Unit	Group
N_RANGE:X1 x N_Range:X2 x	x= 10… 1000 x= 10… 1000	bar bar	IO_CONFIG

N_RANGE (nominal range) is used to define the nominal value of the sensor. This value should always be equal or higher than SYS_RANGE / PS_RANGE. The control parameter cannot be calculated correctly in case of wrong values.

5.4.14 SIGNAL X1/X2 (Type of input signal)

See: description of the SIGNAL:X command

5.4.15 SIGNAL:U (Type and polarity of the output signal)

Command	Parameters	Unit	Group
SIGNAL:U x	x= U+-10 I4-12-20 U-+10 I20-12-4	-	**IO_CONFIG**

This command is used to define the output signal (voltage or current) and to change the polarity.

Differential output ± 100 % corresponds with ± 10 V (0… 10 V at PIN 15 and PIN 16).
Current output ± 100 % corresponds with 4… 20 mA (PIN 15 to PIN 12). 12 mA (0 %) = center point of the valve.

Current output: An output current of << 4 mA indicates an error and the module is disabled. The current input of the proportional valves should be monitored by the valve. The valve has to be deactivated in case of < 4 mA input signal. Otherwise the EOUT command can be used to get a defined output signal.

5.5 Positioning controller

5.5.1 Control structure

Advanced control functions in NC mode. By PT1 behavior, the feedforward control and the acceleration feedback critical drives can be controlled with very low natural frequency, too.

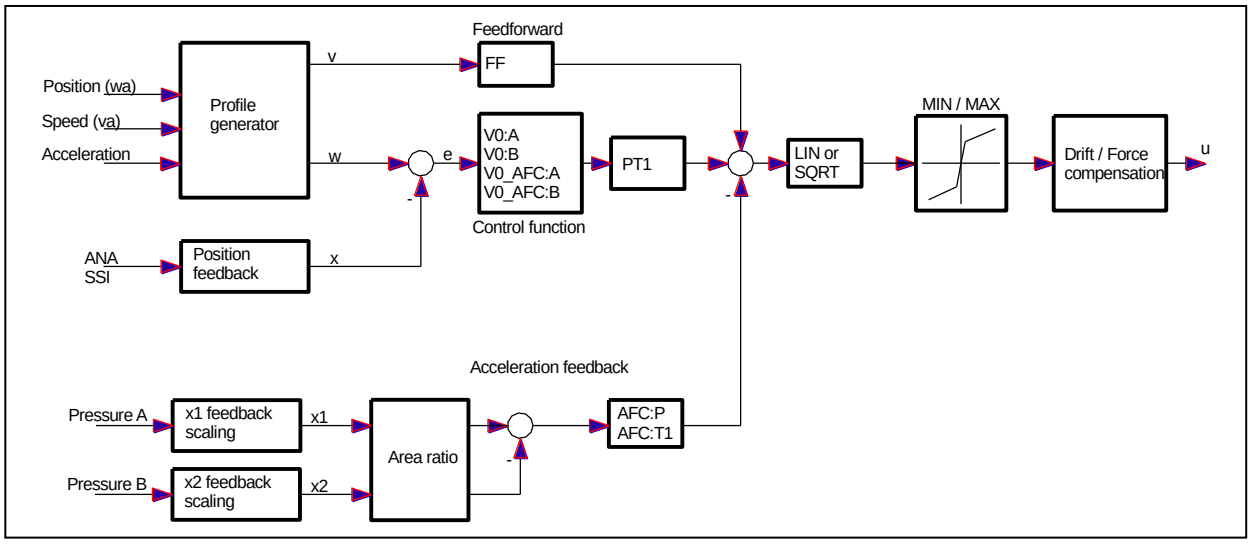

5.5.2 ACCEL (Acceleration)

Command	Parameters	Unit	Group
ACCEL x	x= 1… 20000	mm/s²	**POSITION**

This command is used to define the acceleration. The command is active if the VMODE has been parameterized to NC. The maximum acceleration has to be set to a value lower than the technically achievable acceleration in order to yield a stable and oscillation-free behavior.

5.5.3 VMAX (Maximum speed)

Command	Parameters	Unit	Group
VMAX x	x= 1… 2000	mm/s	**POSITION**

Specification of the maximum speed. This value is defined by the drive system and should be specified as precisely as possible (not too high under any circumstances). The speed is scaled by means of the VELO value or via the external speed demand If the drive has different speeds between retracting and extending, the lower speed must be set.

5.5.4 V0:RES (Scaling of the loop gain)

Command	Parameters	Unit	Group
V0:RES x	x= 1|1/100	-	**POSITION**

V0:RES = 1 loop gain in s^{-1} (1/s) units.
V0:RES = 1/100 loop gain in 0,01 s^{-1} units[4].

The increased resolution 1/100 should only be used in case of $V_0 < 4$.

[4] In case of very low loop gains (1 s^{-1} to 3 s^{-1}) the better resolution of the adjustment should be selected.

5.5.5 V_0 (Loop gain setting)

Command	Parameters	Unit	Group
V0:i x V0_AFC:i x	i= A|B x= 1… 400	s^{-1}	**POSITION**

This parameter is specified in s-1 (1/s). The directions can be entered separately.
In NC Mode normally the loop gain is specified rather than the deceleration stroke[5].

The internal gain is calculated from this gain value together with the parameter VMAX.

$$D_i = \frac{v_{\max}}{V_0}$$

$$G_{Intern} = \frac{SYS\_RANGE}{D_i}$$

Calculation of the internal control gain

The lag distance at maximum speed is calculated by means of the loop gain. This lag corresponds to the deceleration stroke with stroke-dependent deceleration. The conversion and therefore also the correct data demands related to the closed loop control system are relatively simple if the relationship described here is taken into account.

5.5.6 PT1 (Transfer function of the controller)

Command	Parameters	Unit	Group
PT1 x	x= 1… 300	ms	**POSITION**

This parameter can be used to adapt the transfer function of the control function.
Hydraulic drives are often critically to control, especially in case of very fast valves. The PT_1 filter can be used to improve the damping rate and allows therefore higher loop gains.

Requirements for the use are: The natural frequency of the valve should be equal or higher than the natural frequency of the drive.

[5] The loop gain is alternatively defined as a KV factor with the unit (m/min)/mm or as V_0 in 1/s. The conversion is KV = V_0/16,67.

5.5.7 CTRL (Deceleration characteristics)

Command	Parameters	Unit	Group
`CTRL x`	`x= lin|sqrt1|sqrt2`	-	**POSITION**

The deceleration characteristic is set with this parameter. In case of positively overlapped proportional valves the SQRT function should be used. The non-linear flow function of these valves is linearized by the SQRT[6] function.

In case of zero lapped valves (control valves and servo valves) the LIN or SQRT1 function should be used depending on the application. The progressive characteristic of the SQRT1 function has a better positioning accuracy but can also lead to longer positioning times in individual cases.

LIN: Linear deceleration characteristic (gain is increased by a factor of 1).

SQRT1: Root function for braking curve calculation. The gain is increased by a factor of 3 (in the target position). This is the default setting.

SQRT2: Root function for braking curve calculation. The gain is increased by a factor of 5 (in the target position). This setting should only be used with a significantly progressive flow through the valve.

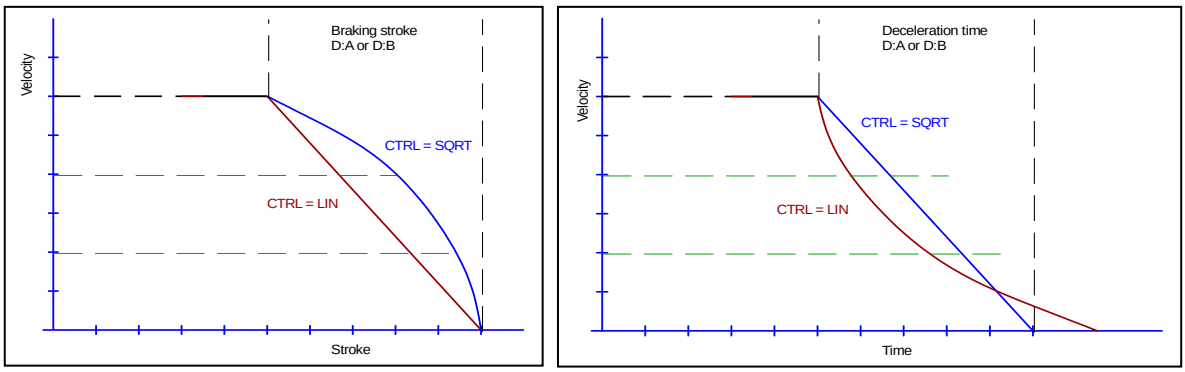

Figure 2 (Braking function with respect to stroke and time)

[6] The SQRT function generates constant deceleration and thus reaches the target position faster. This is achieved by increasing the gain during the deceleration process.

5.5.8 MIN (Deadband compensation)

5.5.9 MAX (Output scaling)

5.5.10 TRIGGER (Response threshold for the MIN parameter)

Command	Parameters	Unit	Group
	i= A|B	-	**POSITION**
MIN:i x	x= 0… 6000	0,01 %	
MAX:i x	x= 3000… 10000	0,01 %	
TRIGGER x	x= 0… 4000	0,01 %	

The output signal to the valve is adjusted by means of these commands. A kinked volume flow characteristic is used instead of the typical overlap step for the position controls. The advantage is a better and more stable positioning behavior. At the same time, kinked volume flow characteristics can also be adjusted with this compensation[7].

CAUTION: If there should also be adjustment options for deadband compensation on the valve or valve amplifier, it must be ensured that the adjustment is performed either at the power amplifier or in the module.
If the MIN value is set too high, this has an effect on the minimum speed, which can then no longer be adjusted. In extreme cases this leads to oscillation around the controlled position.

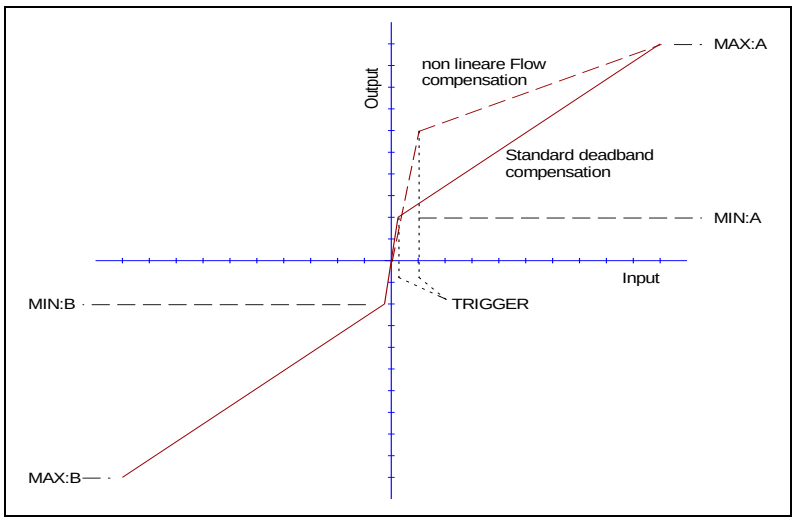

[7] Various manufacturers have valves with a defined nonlinear curve: e.g. a kink at 40 or 60 % (corresponding to 10 % input signal) of the nominal volume flow. In this case the TRIGGER value should be set to 1000 and the MIN value to 4000 (6000).

If zero lapped or slightly underlapped valves are used, the volume flow gain in the zero range (within the underlap) is twice as high as in the normal working range. This can lead to vibrations and jittery behavior. To compensate this, the TRIGGER value should be set to approximately 200 and the MIN value to 100. The gain in the zero point is thus halved and an overall higher gain can often be set.

5.5.11 OFFSET (Valve zero point adjustment)

Command	Parameters	Unit	Group
OFFSET x	x= -4000… 4000	0,01 %	**POSITION**

This parameter is entered in 0,01 % units.
The offset value is added to the output value. Valve zero offsets can be compensated with this parameter.

5.6 Pressure controller

5.6.1 Operating modes / controller structure

The pressure controller in the UHC can perform the following functions:

- None, i.e. the unit operates as a pure positioning module.
- Exclusive pressure control (PQ mode), no positioning
- Pressure limiting control, i.e. as soon as the specified pressure setpoint is reached, the pressure controller takes over.

Since the operating mode is selected via control bits of the fieldbus interface, it is possible to switch between these variants during operation.

ATTENTION: Avoid unnecessary switching by the higher-level control system.
Example: If a positioning movement is performed against a stop or a workpiece and it is clear that first a positioning process in NC mode at a specified speed and later a transition to pressure control is made, the pressure controller should be activated from the beginning. In this way the UHC with its fast cycle times can optimally perform the transition between the two controllers.

Control of the operating mode:

Mode	Bit „PQ_Active“	Bit „PQ_only“
pure positioning	FALSE	FALSE
PQ-mode, no positioning	TRUE	TRUE
limiting control	TRUE	FALSE
direct control of the output	FALSE	TRUE

Controller scheme:

SDD-Mode

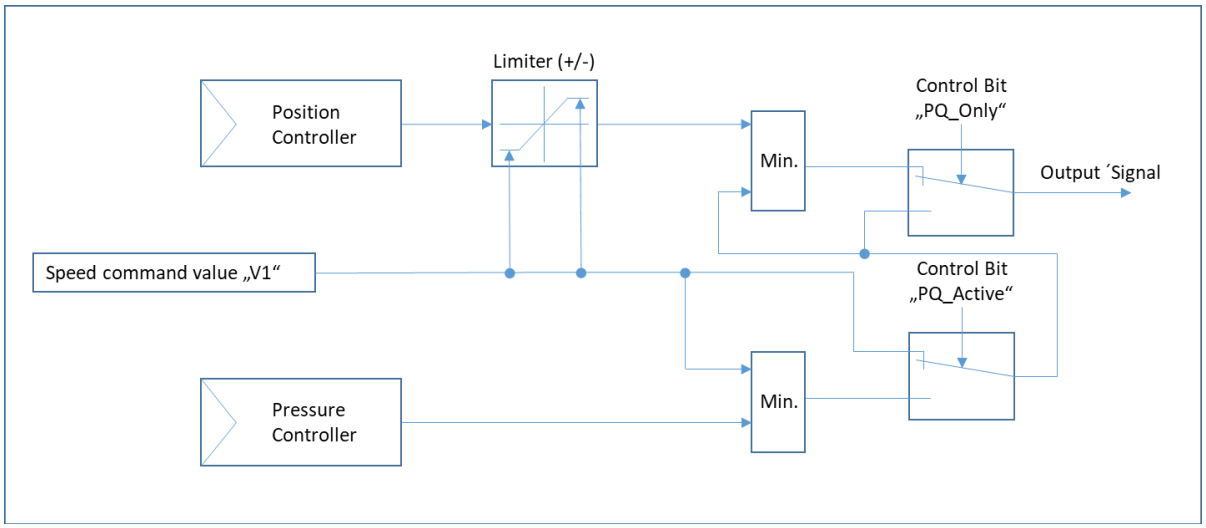

NC-Mode:

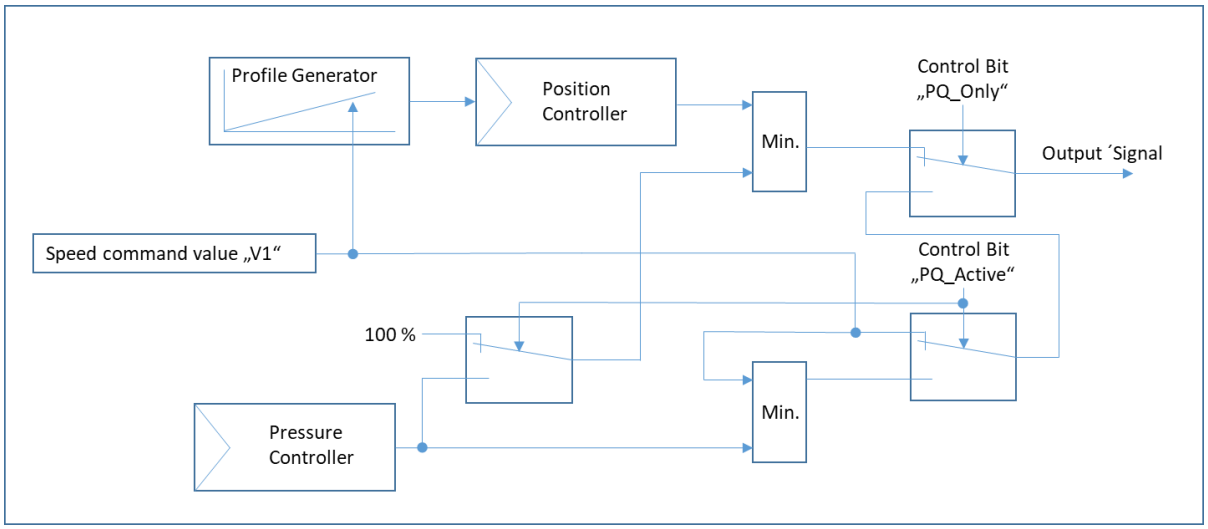

5.6.2 Operating direction / Inverting

In order to achieve a correct function in the interaction between pressure and position control, it is important that the direction of the actual value signals is determined according to this specification:

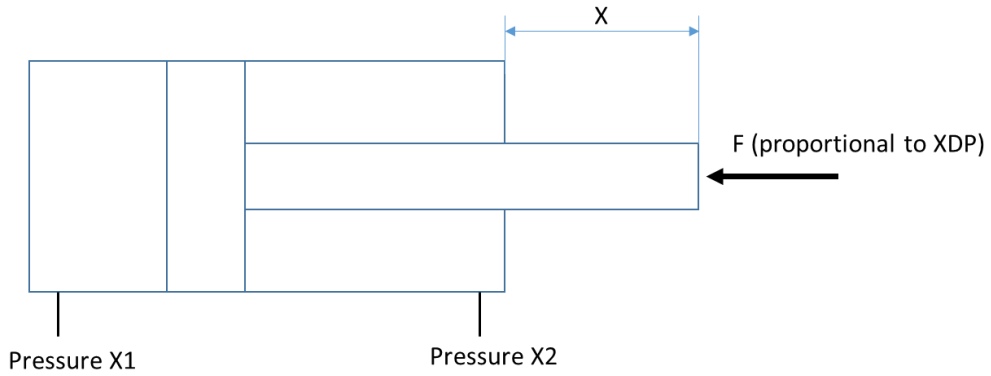

- A pressure at the measuring point "X1" causes the cylinder to extend (in this example) or to increase the measured displacement signal "X
- A pressure at measuring point "X2" causes the cylinder to retract or produce a reduction of the measured displacement signal "X", if signal X2 is present (omission e.g. in the case of plungers)
- A positive differential pressure XDP with "PQ Inverse" not set therefore corresponds to a force against the direction of movement of increasing actual position values X.

In a specific case, the sensors, the effective direction of the cylinder or the area ratio can deviate as long as these three principles are observed.

If, for example, the sensor polarity of the position measurement is inverted, it may be necessary to swap the connections of the pressure sensors on the module and change the parameter ARATIO to its reciprocal value.

Control of the pressure controller function by the bit "PQ_Inverse:

This bit is not suitable to enable a different assignment of the signals (see above). Instead, this bit can be used to determine whether the pressure controller should respond when the cylinder is extended or retracted (more precisely: during a movement with rising or falling "X").

If the bit is set, the calculation of XDP is inverted -> a positive value now corresponds to a force that is opposite to the retraction. At the same time, the coupling of the pressure controller signal into the signal path is carried out via a maximum value selection, so that the controller can influence the activation of the valve in the negative direction.

5.6.3 RA (Command signal ramp time)

Command	Parameters	Unit	Group
RA:i x	i= UP|DOWN x= 1… 600000	ms	**PRESSURE**

The ramp times for the pressure command value are defined here in ms. Two separate time values are entered for increasing and decreasing pressure.

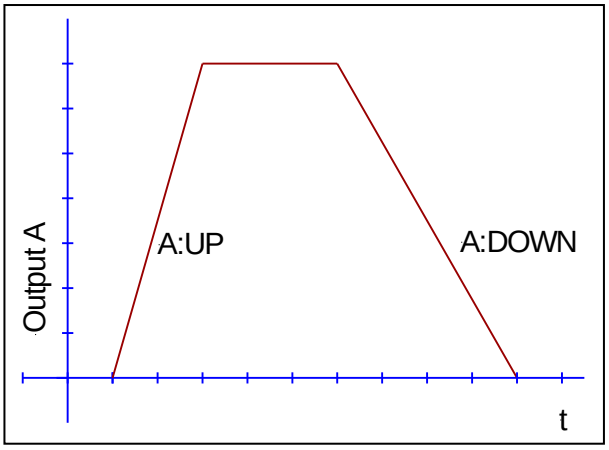

5.6.4 P_OFFSET (pressure offset)

Command	Parameters	Unit	Group
P_OFFSET x	x= -50000… 50000	mbar	**PRESSURE**

This parameter is entered in mbar.
This parameter adds an offset value to the resulting feedback signal. This serves for example to compensate external force differences (suspended loads, spring forces etc.).

5.6.5 ARATIO (Cylinder area ratio)

Command	Parameters	Unit	Group
ARATIO X	x= 200… 5000	-	**PRESSURE**

In order to limit the output force in either direction correctly, the parameter ARATIO provides the ratio of the two areas of the cylinder (bore side / piston side).
Accordingly, a corresponding value of 1000 defines a ratio of 1.

For example: Area ratio = 2.08: ARATIO has to be set to 2080
Area ratio = 0,5: ARATIO has to be set to 500
Area ratio = 1: ARATIO has to be set to 1000

The process variable XDP is calculated using the parameter ARATIO:
XDP = X1 - X2 * 1000/ARATIO if ARATIO >= 1000 and
XDP = X1 * ARATIO/1000 - X2, if ARATIO < 1000.

Thus, a pressure is always calculated that produces the same force acting on the larger of the two surfaces as the two measured pressures.
If only one pressure sensor is connected (SIGNAL:X2 = OFF), the measured value at X1 is taken over directly.
If PQ - Inverse is set, the sign of the XDP value is reversed.

5.6.6 C1/C2 (PID control parameters)

Command	Parameters	Unit	Group
Cx:i x	X = 1|2(parameter set) i= P|I|D|D_T1|I_ACT :P x= 0… 10000 :I x= 0… 30000 :D x= 0… 1200 :D_T1 x= 10… 1000 :I_ACT x= 0… 10000	 0,01 0,1 ms 0,1 ms 0,1 ms 0,01 %	**PRESSURE**

The control function will be parameterized via this command. The two parameters sets can be selected by a fieldbus bit.

The P, I and D gains are similar to a standard PID controller. The T1 factor is used for the D-gain in order to suppress high-frequency noise.

I_ACT controls the integrator function. To reduce pressure overshoots, an activation point for the integrator can be programmed via the I_ACT value. The integrator is activated if the actual pressure is higher than the programmed threshold.

The integrator function of the controller can be disabled in special cases by setting C:I to zero.

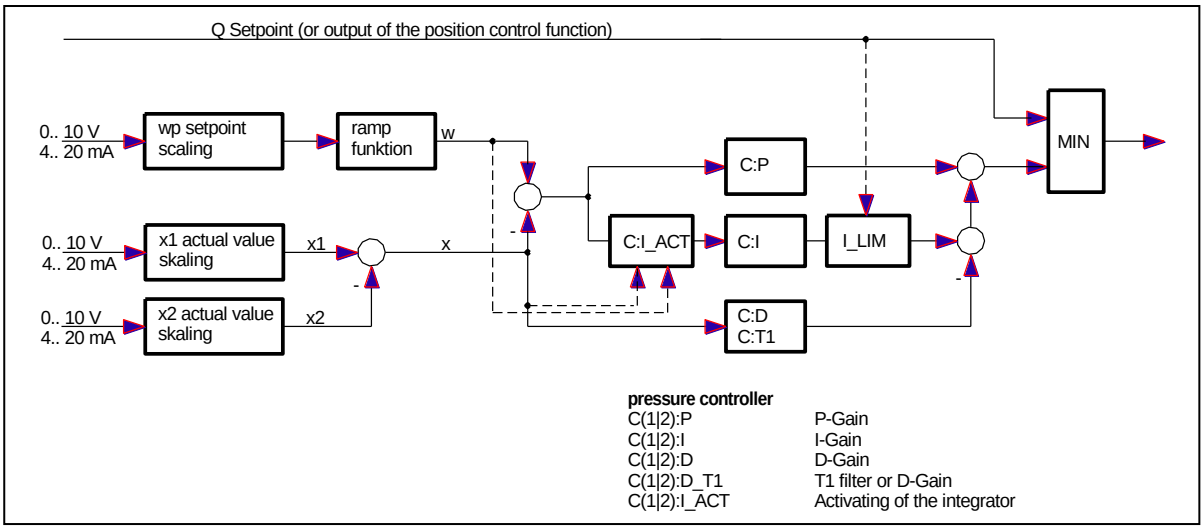

5.7 Advanced functions

5.7.1 FF (Feed forward)

Command	Parameters	Unit	Group
FF:i X	I= A|B x= 0… 15000	0,01	**EXTRA**

With this command a feed forward value is parameterized for the compensation of the following distance. The function is activated via the corresponding control bit (fieldbus).

5.7.2 AFC:P (Gain of the acceleration feedback)

5.7.3 AFC:T1 (Filter time for acceleration feedback)

Note: The AFC function and the associated parameters are not available in the EtherCAT variant.

Command	Parameters	Unit	Group
AFC:i x	i= P|T1 P x= 0… 10000 T1 x= 1… 1000	 0,01 ms	**EXTRA**

This command is used to define the filter time constant and gain of the acceleration feedback. The acceleration is measured by the differential pressure together with a kind of D-filter to compensate a constant external force (pressure).

The acceleration feedback can be activated by a control bit over the fieldbus. The loop gain parameters are switched over simultaneously between V0 and V0_AFC.

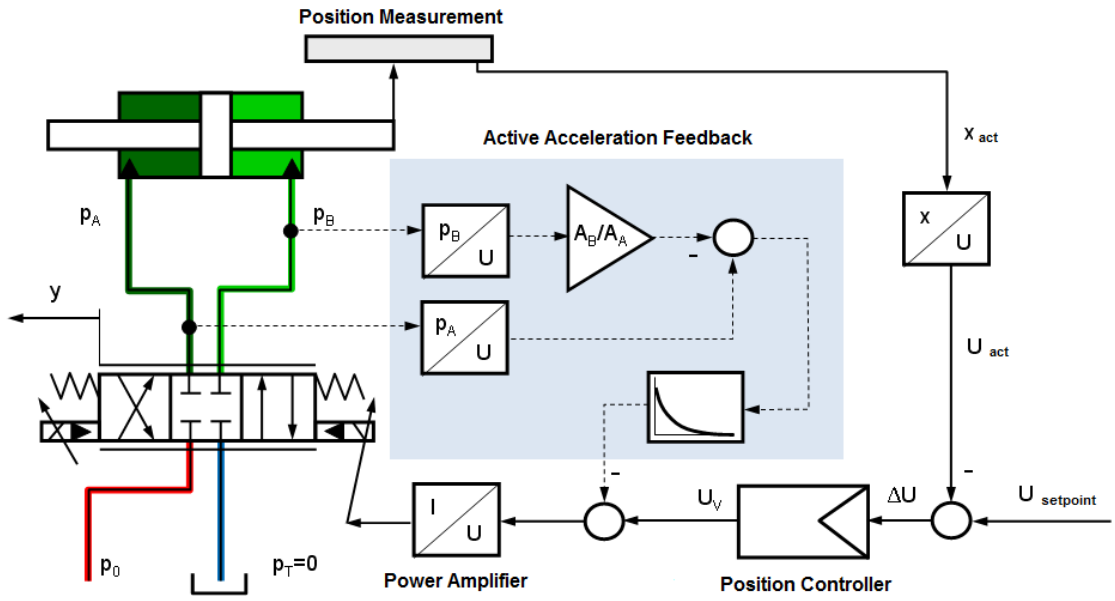

5.7.4 AFC_V0:A/B (Loop gain with active acceleration feedback)

Command	Parameters	Unit	Group
AFC_V0:i x	i= A|B x= 1… 400	s^{-1}	**EXTRA**

This parameter is specified in s-1 (1/s). The directions can be entered separately.

In case of a defective pressure sensor, the loop gain V0 should be used by the deactvation of the corrsponding fieldbus bit. Typically a lower loop gain is used without acceleration feedback.

5.7.5 Drift compensation / high accurate positioning

The high accurate positioning or the drift compensation can be used in case of external influence which is limiting the positioning accuracy. This function can be critical because limit cycling[8] could be caused by wrong parameterization.

Which positioning errors can be compensated[9]?

1. Zero point adjustment of the valve. By this kind of error a constant offset between command and feedback signal remains. This error is more or less constant.
2. Zero point deviation depending on the temperature. The same behavior as point 1, but the effect is increasing slowly (over the temperature).
3. Position error caused by an external force. All control and servo valves have a typical pressure gain characteristic. In case of external forces an output signal of 2…3 % has to be generated for the compensation of this force. And this signal is proportional to the positioning error. In opposite to point one

[8] The „limit cycling“ is a small and permanent oscillation around the target position. The main reason are static frictions and the hysteresis of the valve. By proper parameter setting, this can be avoided under the boundary condition that the desired accuracy is not achieved. In this case, the hydraulic system is the limiting factor in the accuracy.

[9] This is relevant for zero lapped control valves and servo valves.

and two the positioning error generated by forces can vary from cycle to cycle.

How does the drift compensation / high accurate positioning work?

The position errors should be compensated when the axis is near by the target position. The drift compensator generates a slowly changing output signal (integrating behavior) by which the a.m. errors can be eliminated.

To prevent instabilities, the integrator value will be frozen when the output value is lower than the deactivation limit (DC:DV).

Drift compensation (zero point adjustment)

By this function position errors described below point one and two are eliminated.

High accurate positioning (external force compensation)

To compensate positions errors as described below point three.

Control bits via fieldbus:

Through the fieldbus it is possible to activate drift compensation as well as high accurate positioning.

This can be accomplished by using the following control bits:

DC_ACTIVE: General activation of the drift compensation and high accurate positioning[10].

DC_FEEZE: Freezing of the static drift compensation value.

DC_F_POS: Activation of the high accurate positioning (dynamic drift compensation).

Typical setup

Valve pressure gain: 2,5 %; the activation point has to be set to 3… 5 % (DC:AV 300… 500).
Valve hysteresis: 0,5 %; the deactivation point has to be set to 0,7… 1,0 % (DC:DV 70… 100). The lower the value the better the accuracy.

DC:CR should be equal to DC:AV. Limiting the control range of the integrator is necessary to avoid long settlement durations.

The optimum integrator time has to be determined experimentally. Starting with higher values is recommended.

The integration time usually has to be determined by experiments. For this it is recommended to start with a long time (1500 ms) and to reduce it gradually. If overshooting or limit cycling occurs, the time setting has become too small.

[10] The static drift compensation to adjust the zero point and the freezing of this value should always be carried out at first. Only by this it is possible to avoid or minimise overshooting of the target position.

5.7.6 DC:AV (Activation value)

5.7.7 DC:DV (Deactivation value)

5.7.8 DC:I (Integrator time)

5.7.9 DC:CR (Integrator limitation)

Command	Parameter	Unit	Group
DC:I x	x= 10…2000	ms	**EXTRA**
DC:AV x	x= 0… 1000	0,01 %	
DC:DV x	x= 0… 1000	0,01 %	
DC:CR x	x= 0… 500	0,01 %	

DC:I This parameter is used to define the integrator time. The lower this value the faster the compensation. Low values will result in „limit cycling“.

DC:AV This parameter is used to define the activation point (activation value). The DC function is completely deactivated in case of DC:AV = 0.

DC:DV This parameter is used to define the deactivation point (DV = deactivation value) Within the deactivation window no compensation value will be calculated (frozen state).
DC:AV = 0 should be used for best positioning, but „limit cycling“ can occur. This value should be set to 50 % of an acceptable error.

DC:CR The output range of the DC function will be limited (CR = control range) by this parameter.

5.7.10 MR-Controller / Distributed Synchronisation Control

5.7.10.1 Description of the general concept

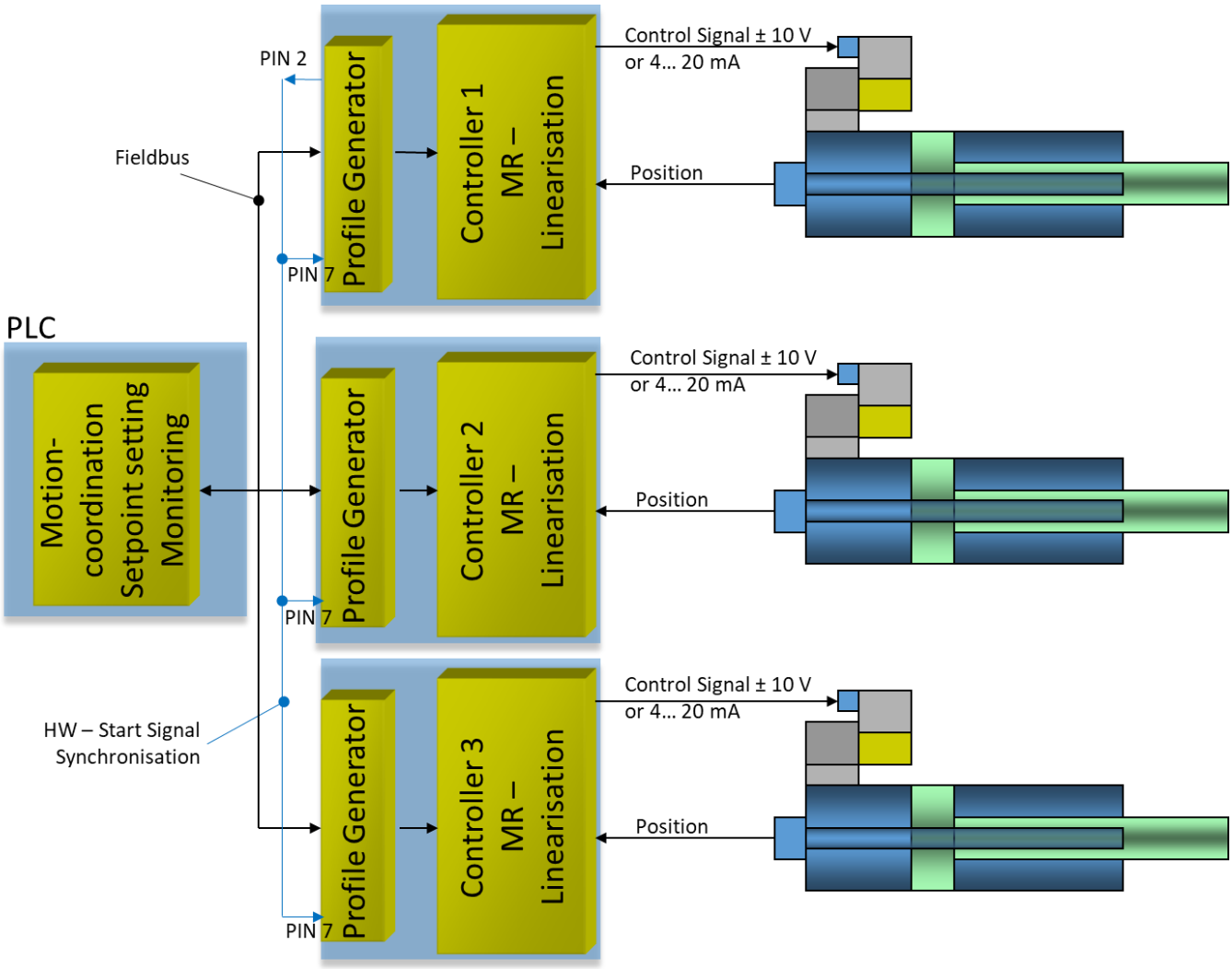

With the UHC-126-U-xxx-S2, a synchronisation system with distributed functionality can be realised. Each axis is equipped with an assigned UHC. The MR controller ensures that each axis follows the profile generator's setpoint profile independently of its load with the same set lag. In this way, synchronisation is automatically ensured if the individual profile generators start with the same target value at the same time.

A delay-free synchronisation of the start points is therefore of great importance.

In order to realise this independently of bus delays, the start command is realised in parallel to the bus communication by a hard-wired signal. This signal is picked up at the digital output PIN 2 at one of the participating devices and connected to the input at PIN 7 at all participating UHC.

Important prerequisite for the proper functioning of the concept:
The nominal profiles of the axes must match and the nominal lag must be identical. This means in practice:

- The axes are operated in NC mode (the S2 version of the UHC has no possibility to switch to SDD mode).
- The MR - controller is activated
- Same setpoints (W1, V1) for all axes involved
- A second profile segment cannot be used
- Same parameterisation of maximum speed VMAX
- Same parameterisation of acceleration ACCEL
- Same setting of the loop gains V0:A / V0:B in the axes (but the two values may differ)

5.7.10.2 Functions in the control module

The UHC contains the following additional functions required for distributed synchronization:

- switch-over of the start signal to the HW input (this is activated by the control bit "SYNC_mode")
- Output of the bus start command to pin 2
- Defined - delayed start-up to achieve an immediate alignment of the setpoint when starting from different reference positions. For this purpose, the axes which are closer to the target positions at the start of the movement start a little later and thus compensate exactly for the initial deviation. The control bit "SYNC_mode" is used for activation, the lag distance is also transmitted via the field bus via the value "start-up delay (synchronisation)".
- To ensure that the new position setpoint has been transmitted to all participating axes before the start, there are the bits SYNC_tick in the field bus - control and status word. After a setpoint change a rising edge should be generated in the control bit. As soon as this has been reported via the status bit, the numerical values for the new setpoints have also been accepted and the start bit can be set.
- MR - controller for linearisation of the axes, so that the following error is equal and therefore the synchronism is achieved (see below)

5.7.11 MR - Controller

Command	Parameters	Unit	Group
`MR:T1 x` `MR:T2 x`	`x= 0… 1000`	`ms`	**EXTRA**

The MR controller is a subordinate controller that linearises the hydraulic drive's behavior. The drive moves with a lag defined by the loop gain and the specified maximum speed (independent of external load forces).

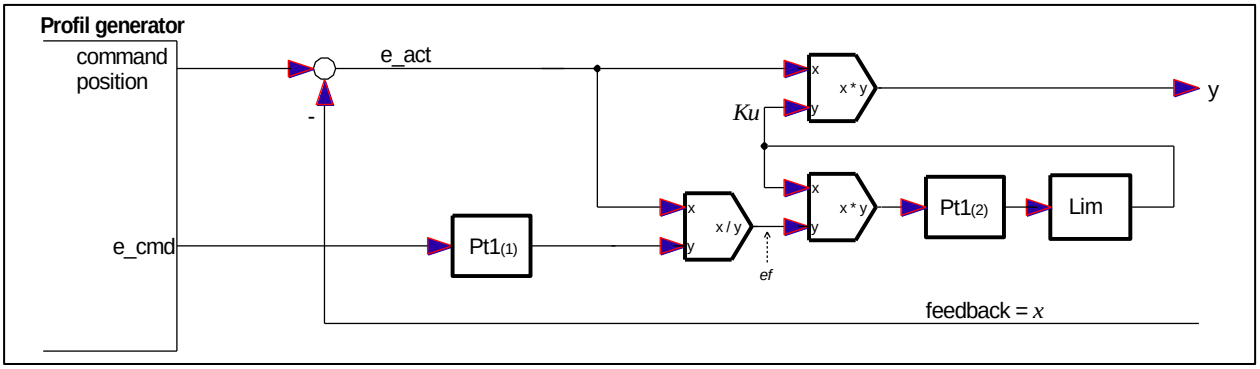

The controller is parameterized via the time constants T1 and T2.

The procedure for controller optimization is:

1. Disable MR controller
2. Optimize the loop gain in NC mode. It is advisable to reduce the loop gain slightly because the MR controller is an additional dynamic element in the control loop.
3. Parameterize the MR controller: T1 = 1 / V0 and T2 = T1 * 1.6
   With this default setting, satisfactory results should be achievable.The correct parameterization is of course application-dependent.
4. Activate the MR controller by setting the appropriate bit via the fieldbus

5.7.12 SYNCWIN (Synchronization monitoring)

Since the individual axis modules have no information about the current position of the other axes, they monitor their own positioning process. If this is carried out according to the presetting for all the drives involved, synchronism is obtained.

The EMR deviation formed in the MR controller is used for monitoring. This is a variable which remains very small if the controller is well parameterised. It is better to use the setpoint following error filtered by the 1st PT1 than an unfiltered value E_S - E, as the following example shows:

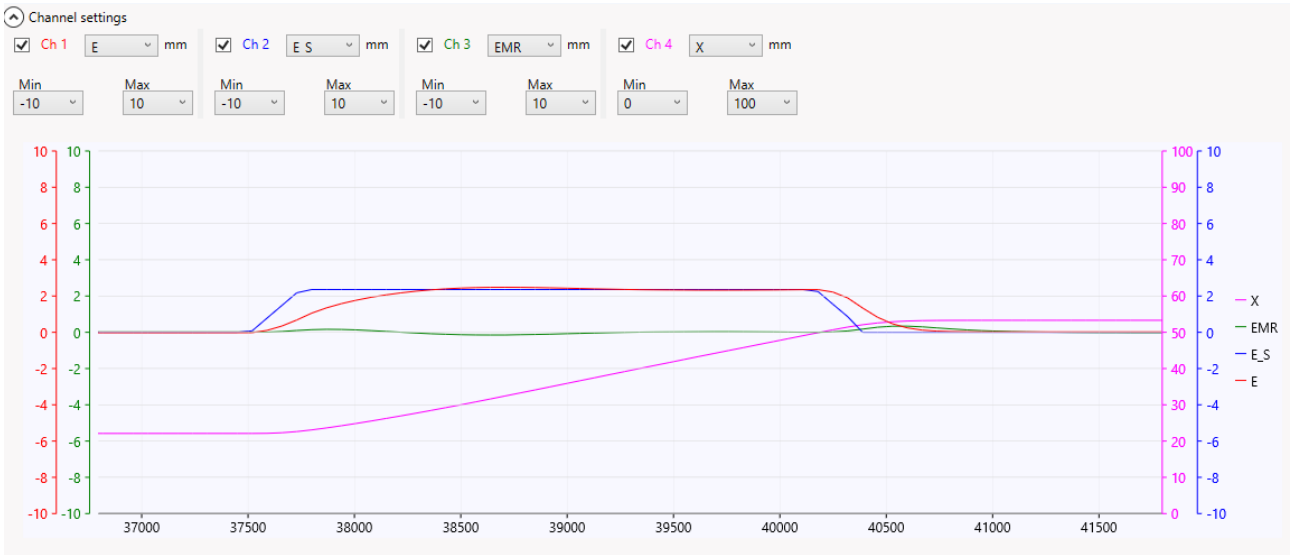

A positioning procedure with activated MR - controller is shown. Therefore after the acceleration phase the lag "E" is adjusted to its reference value "E_S".

At the beginning of the movement this distance is built up with a certain delay, which is ideally described by the element PT1(1) in the MR - algorithm. For this reason the green line (EMS) shows only a very small deviation. A monitoring can work with smaller limit values. The triggering is not delayed, because the filtering is only done in the setpoint branch.

Command	Parameter	Unit	Group
SYNCWIN x	x= 0… 10000	0.1 mm	**EXTRA**

The logic of the signal processing for monitoring operates as follows:

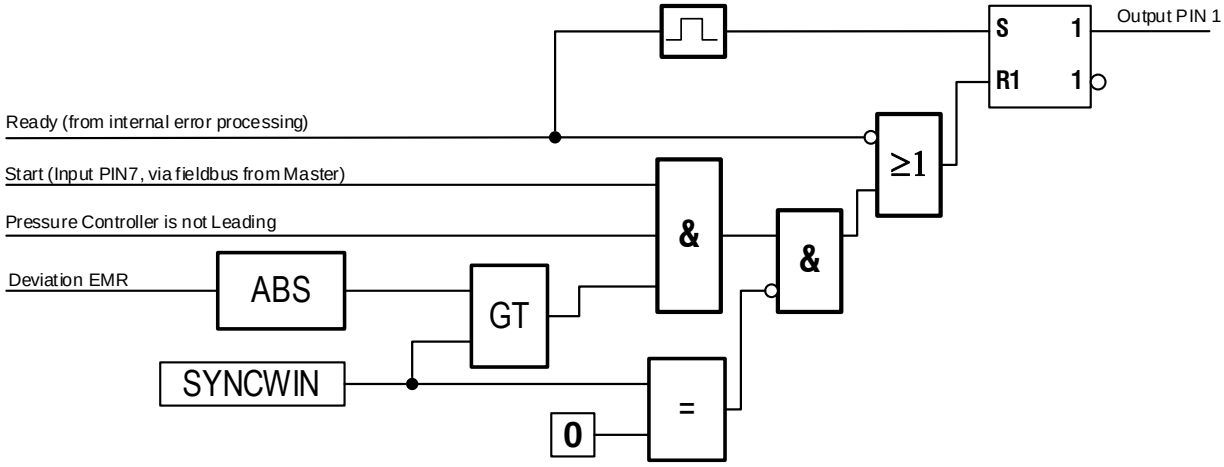

A combined READY / SYNCWIN signal is output at PIN 1. If SYNCWIN is left at factory setting (0), the monitoring is inactive and PIN 1 transmits the READY - signal as it is generated by the internal error processing to control the readiness.

If a value > 0 is entered, the processing of the setpoint profile is monitored. If the deviation "EMR" becomes greater than the parameter "SYNCWIN" while the unit is active (Start & Ready) and the pressure controller does not intervene, the output at PIN 1 is reset. This will be stored until the next rising edge at "Ready", i.e. PIN 1 remains inactive until either the HW - Enable or the Enable - bit has been reset and set again via the fieldbus.

5.7.13 Concepts of synchronisation monitoring (system-wide)

5.7.13.1 Variant 1 (hard-wired)

The function described in the previous section, which controls a logic output of the module, is suitable for a very fast response, independent of the cycle time of the field bus and the processing PLC, if the output is used directly to control blocking valves (via a fast coupling relay). This is the preferred variant when:

- An abrupt stop by abrupt closing of switching valves is permitted.
- A very fast reaction of the monitoring is necessary, e.g. at high speeds in combination with small permitted deviations.
-

A typical design of the shutdown circuit in variant 1 is shown on the next page with the example of two axes. The representation is limited to the relevant signals. The hydraulic circuit can of course look different, e.g. a shut-off between proportional valve and cylinder with seat valves is certainly a good variant, as well as a pilot control of the switching valves with consideration of the switching times.

The PLC controls the solenoid coil(s) of the shut-off path via a switching output. By connecting relay contacts in series, which are switched via the outputs at PIN1 of the participating UHCs, operation is enabled by the controller. In case of a switch-off, it is thus possible to react very quickly without the involvement of the PLC.

As the PLC reads back via an input whether the output signal has passed the switch-off chain or an interruption has occurred, this information can be used to react accordingly: If the signal does not get through despite activation, but all UHCs report back via the bus "READY", the synchronisation monitoring must have triggered. Now a message can be generated, the setpoint/movement sequence can be stopped accordingly, and before restarting, the shutdown can be reset by a negative pulse of the "ENABLE" signals to the modules.

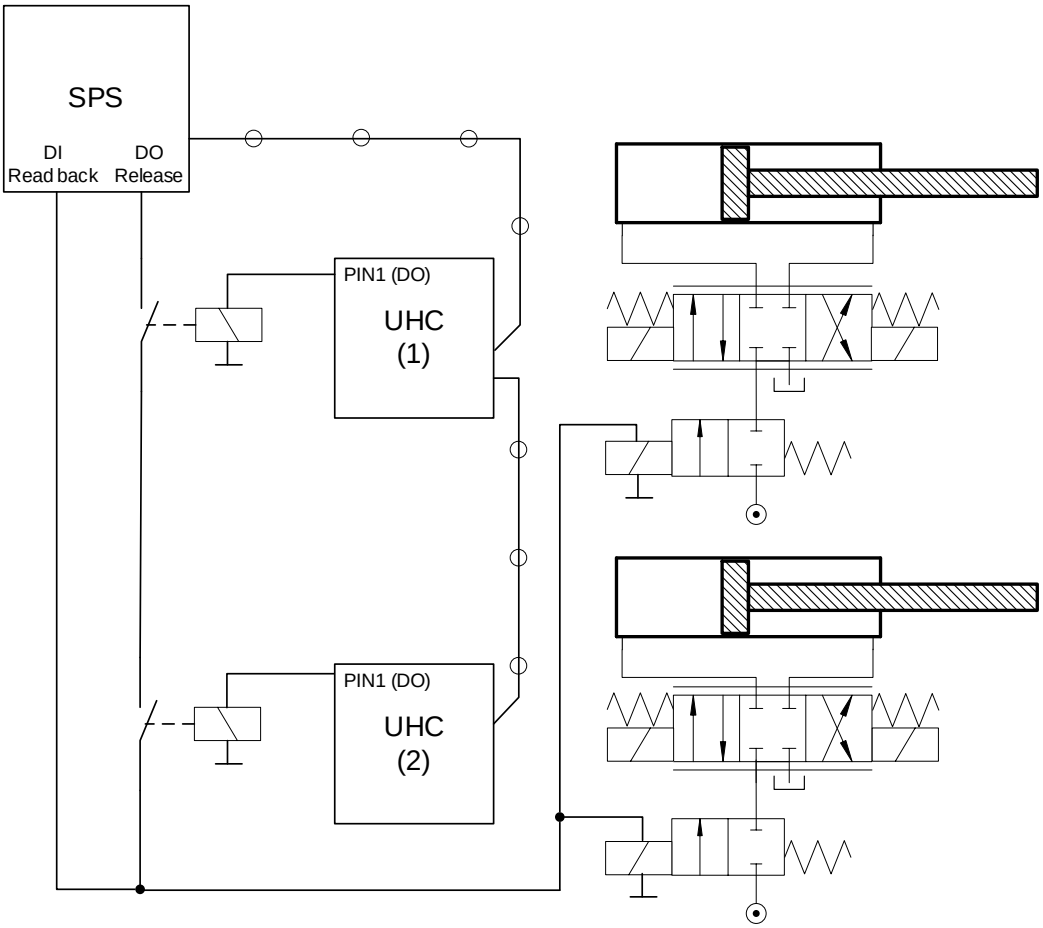

5.7.13.2 Variant 2 (PLC - software function)

If the cycle time of the PLC or the field bus is sufficient to react fast enough, the monitoring should be realised as a pure software function. The parameter "SYNCWIN" remains at the preset value "0". The PLC module UHC_SYNC_MASTER supplies the synchronisation deviation at its output "DEV". See chapter 12.2.

The deviation output there is positive by definition and can be compared with a limit value during movement. If a freely selectable switch-off value is exceeded, the PLC software should reset the control bit "START_SYNC" at the input of this block. As a result, the UHCs will stop the axes quickly but not abruptly. This is done by stopping the profile generators so that the lag is available as emergency braking distance. Of course, it is also possible to use switching valves in variant 2. However, if the stopping process is to be realised via the emergency braking ramp, a staggered reaction time must be provided: 1. set START_SYNC = 0, then trigger 2. switching valves.

5.7.14 SELPLUS (additionally transmitted bus signals)

Command	Parameter	Unit	Group
SELPLUS:i X	I= 1|2 x= -|E_S|CS|WP|EP|CP|U|VACT	-	**EXTRA**

Bytes 22 - 25 of the output signals to the fieldbus can be freely connected to two of the internal process variables. These parameters are used to determine the assignment.

The following table on the next page gives an overview of the adjustable signals, their value ranges and scaling:

Signal	Description	Range	Unit
E_S	Target - lag distance	+/- 30000	0,01 mm
CS	Control signal of the position controller	+/- 10000	0,01 %
WP	Pressure setpoint after ramp	0… 10000	0,1 bar
EP	Pressure setpoint minus actual pressure value	+/- 10000	0,1 bar
CP	Control signal of the pressure controller	+/- 10000	0,01 %
U	Output signal of the module	+/- 10000	0,01 %
VACT	Measured actual speed	+/- 30000	0,1 mm/s
EMR	Control deviation MR - controller	+/- 30000	0,01 mm

5.7.15 Limits of the pressure Controller

Command	Parameter	Unit	Group
CP:I_ULIM X CP:I_LLIM X	x= 0… 10000 x= -10000… 0	0,01 % 0,01 %	**EXTRA**

These parameters can be used to define the limits of the pressure controller or its integral part.

The upper limit is used to realize a continuous transition from position to pressure control. If values < 10000 are entered here, this means that the integrator no longer covers the complete output range of the position controller. If the actual pressure value approaches the setpoint when the position controller is under full control, the P component is reduced and the pressure controller takes over continuously as soon as the sum of this component and the limited integral component falls below the output signal of the position controller.

If you want to prevent or limit the pressure controller from controlling the valve in the opposite direction beyond zero (active pressure reduction), you can use the ...LLIM parameter. If it is set to the value "0" this is completely suppressed.

5.7.16 PROFSTOP (Stop of the profile generator)

Command	Parameter	Unit	Group
PROFSTOP X	x= ON|OFF	-	**EXTRA**

If the device is operated in NC mode with the pressure controller activated, the profile generator will continue to run when the pressure controller intervenes, thus increasing the lag between the actual value and the setpoint. If the operating situation then changes and the position controller takes over the guidance again, this is accompanied by a fast movement in the setpoint direction which does not follow the profile. To avoid this behavior, the device can be set up via the parameter "PROFSTOP = ON" in such a way that the profile generator stops as soon as it has lost its guidance over the movement due to the intervention of the pressure controller. If the pressure regulator does not intervene any more, the profile is automatically released again.

ATTENTION! The combination of "PROFSTOP = ON" and synchronisation monitoring is problematic!

5.8 Special commands

Please contact W.E.St. in case of using these commands.

5.8.1 AINMODE (Input scaling mode)

Command	Parameter	Unit	Group
AINMODE x	x= EASY|MATH	-	**TERMINAL**

This command is used to switch over the kind of input scaling.

The AINMODE is used to define the kind of parameterizing of the analogue inputs. The EASY mode (DEFAULT) supports a simple and application oriented input scaling.

The MATH mode supports the free input scaling by a linear equation. This mode is compatible to our older modules.

Attention: This command can be executed in the terminal window only. In case of switching back, DEFAULT data should be reloaded.

5.8.2 AIN (Analogue input scaling)

Command	Parameters	Unit	Group
AIN:X	a= -10000… 10000	-	**MATH / IO_CONFIG**
AIN:X1	b= -10000… 10000	-	
AIN:X2	c= -10000… 10000	0,01 %	
	x= V|C	-	

This command offers an individual scalable input. The following linear equation is used for the scaling.

$$Output = A/B \cdot (Input\text{-}C)$$

The ***"C" value*** is the offset (e.g. to compensate the 4 mA in case of a 4… 20 mA input signal).
The variables ***A*** and ***B*** are defining the gain factor with which the signal range is scaled up to 100 % (e.g. 1.25 if using 4… 20mA input signal, defined in default current settings by A = 1250 and B = 1000). The internal shunt for the current measuring is activated with switching the ***X*** value.

The gain factor is calculated by setting the usable range (***A***) in relation to the real used range (***B***) of the input signal. Usable are 0… 20mA, means (***A***) has the value **20**. Really used are 4… 20mA, means (***B***) has a value of **16** (20-4). Not used are 0… 4mA. In a range of 20mA this is an offset of 20%, means a value of **2000** for (***C***). Last but not least (***X***) has to be set to **C** choosing current signal.

In this case AIN command would look like this:

AIN:I 20 16 2000 C or AIN:I 1250 1000 2000 C.

Typical settings:

Command	Input	Description
AIN_1:X 1000 1000 0 V	0… 10 V	Range: 0… 100 %
AIN_1:X 10 8 1000 V OR **AIN_1:X 1000 800 1000 V**	1… 9 V	Range: 0… 100 %; 1 V = 1000 used for the offset and gained by 10 / 8 (10 V divided by 8 V (9 V -1 V))
AIN_1:X 10 4 500 V OR **AIN_1:X 1000 400 500 V**	0,5… 4,5 V	Range: 0… 100 %; 0,5 V = 500 used for the offset and gained by 10 / 4 (10 V divided by 4 V (4,5 V -0,5 V))
AIN_1:X 20 16 2000 C OR **AIN_1:X 2000 1600 2000 C** OR **AIN_1:X 1250 1000 2000 C**	4… 20mA	Range: 0… 100 % The offset will be compensated on 20 % (4 mA) and the signal (16 mA = 20 mA-4 mA) will be gained to 100 % (20 mA). Each of this parameterization for 4… 20 mA is setting the range to 0… 100 %.

5.8.3 ETC_LOOP (Transfer rate)

Command	Parameters	Unit	Group
ETC_LOOP X	x= NORMAL|FAST		**TERMINAL**

Only available when using EtherCAT devices!

In the default setting, the data is sent and received every 6 ms. The setting "FAST" shortens the data rate to 3 ms. A fieldbus parameterization is not possible if this rate has been chosen.

5.8.4 MR (Activation of the MR-Controller)

Command	Parameters	Unit	Group
MR X	x= ON|OFF		**TERMINAL**

Like the activation via the fieldbus, the MR controller can be activated by this command as described in the chapter MR-controller. The control bit "MR" of the fieldbus control is overwritten, if this command has been parameterized to "ON". The purpose of this function is to be able to activate the MR-controller without fieldbus connection. So it is possible to operate it during the commissioning using the remote-control function in the monitor window of the WPC program.

5.8.5 Remote control square - wave generator

Note: This function and the associated parameters are not available in the EtherCAT variant.

Command	Parameters	Unit	Grou
ACA:i x	i= CYCLE|POS1|POS2 :CYCLE x= 0… 30000 :POS1 x= 0… 10000 :POS2 x= 1… 10000	 ms mm mm	**TERMINAL**

Using remote control (a WPC function), a square-wave generator can facilitate commissioning by holding the axis in motion cyclically between two positions. The lower position is determined by the command "ACA: POS1" in mm. The upper position is corresponding to "ACA: POS2".
The generator is only started if the parameter "ACA: CYCLE" is set to a time above zero. The value should be chosen appropriately according to the axis speed.

5.8.6 PCTRLOLD (Compatibility mode)

Command	Parameter	Unit	Group
PCTRLOLD X	x= ON|OFF	-	**TERMINAL**

With this command it can be achieved that the pressure controller behaves with regard to its tracking as it did up to and including version 2140: When compatibility mode is enabled, the tracking is inactive.

5.8.7 DIAG (Query of the last switch-off causes)

If this command is entered in the terminal window, the last 10 shutdowns (loss of Ready when Enable is present) are displayed. However, the causes of the shutdown are not stored when the supply voltage is switched off. The last cause is displayed in the bottom line of the list. Entries "---" indicate unused memory cells.

An example:

```
>DIAG
---
---
---
---
---
---
---
---
SSI-Sensor
INPUT PIN 6
>
```

5.8.8 SSI:BITMASK

Kommando	Parameter	Einheit	Gruppe
SSI:BITMASK X	x= - 2147483647 … 2147483647	-	**TERMINAL**

Some SSI sensors provide several bits with diagnostic information. Via the parameter SSI:ERRBIT one of these bits can be selected for error detection and removed from the conversion of the measured value. If several bits must be blanked out, this can be done via this mask. Convert the bit pattern, in which a "1" marks the bits to be blanked, into a decimal number and enter this number here.

5.8.9 NEGW (Release of negative position setpoints)

Command	Parameter	Unit	Group
NEGW X	x= ON|OFF	-	**TERMINAL**

The specification of negative position setpoints can be useful if you have set a negative sensor offset so that the actual position of the axis can actually fall below the zero point. In this way it is possible, for example, to move to the actual end stop via the profile generator and then readjust the offset.

5.9 PROCESS DATA (Monitoring)

Command	Description	Unit
WA	Demand value (input signal)	mm
W	Demand value (according to the profile generator)	mm
VA	Speed input	%
X	Actual position value	mm
E	Position error value	mm
E_S	Lag setpoint[11]	mm
EMR	Linear error signal of the MR - controller	mm
CS	Output of the position controller	%
WAP	Command pressure	%
WP	Command pressure (after ramp)	bar
X1	Actual pressure value 1	bar
X2	Actual pressure value 2	bar
XDP	Pseudo differential pressure[12]	bar
EP	Pressure error value	bar
CP	Output signal of the pressure controller	%
U	Output signal of the module	%
VACT	Actual measured speed	mm/s

The process data are the variables which can be observed continuously on the monitor or on the oscilloscope.

[11] The lag setpoint is calculated on the basis of the adjusted controller gain, the maximum speed of the axis and the actual speed setpoint (only in NC mode). If the MR controller is activated it is possible to compare E and E_S during the movement and by this to evaluate the transient response of the algorithm.

[12] This represents the process value of the pressure controller. XDP = X1-ARATIO * X2 or if PQ_Inverse is set: XDP = ARATIO * X2-X1

6 Common device functions

6.1 Failure monitoring

Following possible error sources are monitored continuously when SENS = ON/AUTO:

Source	Fault	Reaction
Feedback signal pressure PIN 13 / PIN 6 - 4... 20 mA	Out of range or broken wire	The output is deactivated if the pressure controller is enabled via the control bit "PQ_Active". There is no reaction in pure positioning mode.
Feedback signal position PIN 14 - 4… 20 mA	Out of range or broken wire	The output will be switched off.
SSI-Sensor Sensor value	Out of range or broken wire	The output will be switched off.
EEPROM (when switching on)	Data error	The output is deactivated. The module can only be activated by saving the parameters again!
RC - Mode	The WPC connection (since WPC-V4.0) is disconnected during RC operation, e.g. by exiting the program or pulling the USB plug.	The output will be switched off.
PIN 7	In synchronisation mode, the start signal is set via the field bus, but there is no activation via PIN7 within 200 ms.	The output is deactivated. Since the PLC registers the absence of READY, the SYNC_MASTER switches off the entire system.

CAUTION: Take care of the EOUT command. Changes will influence the behavior.

6.2 Troubleshooting

It is assumed that the device is in an operable state and there is communication between the module and the WPC-300. Furthermore, the valve control parameterization has been set with the assistance of the valve data sheets.

The RC in monitor mode can be used to analyze faults.

CAUTION: All safety aspects must be thoroughly checked when working with the RC (Remote Control) mode. In this mode the module is controlled directly and the machine control cannot influence the module.

FAULT	CAUSE / SOLUTION
ENABLE is active, the module does not respond and the READY LED is off.	There is presumably no power supply or the ENABLE signal (PIN 8) is not present. If there is no power supply, there is also no communication via our operating program. If a connection has been made to the WPC-300, then a power supply is also available. If the power supply exists, an attempt should be made to see whether the system can be moved by means of the HAND+ and HAND- inputs (measuring the output signal to the valve is helpful).
ENABLE is active, the READY LED is flashing.	The flashing READY LED signals that a fault has been detected by the module. The fault could be: • A broken cable or no signal at the input (PIN 13 or PIN 14), if 4… 20 mA signals are parameterized. • No SSI sensor • Internal data error: press the command/SAVE button to delete the data error. The system reloads the DEFAULT data. With the WPC-300 operating program the fault can be localized directly via the monitor.
ENABLE is active; the READY LED is on, the system moves to an end position.	The control circuit polarity is incorrect. The polarity can be changed with the POL command or by reversing the connections to PIN 15 and PIN 16.
ENABLE is active, the READY LED is on, the STATUS LED is not on, the system moves to the target position but doesn't reach it (positioning error).	Serious positioning errors can result from incorrect parameterization or incorrect system design. • Is the cylinder position specified correctly? • Are the deceleration strokes correct (to start the system the deceleration distances should be set to approx. 20… 25 % of the cylinder position[13])? • Is the valve a zero lapped control valve or a standard proportional valve? In case of a proportional valve, the valve overlap which may be present should be compensated for with the MIN parameters. Typical values can be found in the valve data sheet.
ENABLE is active, the READY LED is on and the system oscillates on the target.	The system is working and also actuating the valve. Various potential problems could be: • The parameterization is not yet adjusted to the system (gain too high). • There is severe interference on the power supply. • Very long sensor cables (> 40 m) and sensor signal interference. • The MIN setting to compensate the valve overlap is too high.

[13] The stability criterion of the hydraulic axis must be taken into account.

FAULT	CAUSE / SOLUTION
	As a basic principle, the parameterization of the sensor data and the controller settings must be carried out first (before switching on). An incorrect demand is equivalent to an incorrect system design which then leads to incorrect operation. If the system oscillates, the gain should first be reduced (longer deceleration distances for D:A and D:B) and in case of overlapped valves the MIN parameter should also be reduced.

Speed too low	The drive may be able to move to position but the speed is too low.
	• Check the control signal to the valve
	  • via the integrated oscilloscope (U variable)
	  • measure the signal to the valve with an external oscilloscope/voltmeter.
	• If the control is within the range of ± 100 % (± 10 V), the fault must be sought in the hydraulics.
	• If the control signal is relatively low, the following points should be checked:
	  • Is the internal/external speed signal limiting the speed?
	  • Which setting has been specified for the deceleration distance in relation to the POSITION?

Speed too high	The drive should move to position. The drive moves in and out too fast leading to uncontrolled behavior. Reducing the speed (MAX or VELO parameter) has very little or no effect. • The hydraulic system is over-sized. The entire parameterization of the movement cycle cannot be reproduced (overlap and deceleration distance settings)

6.3 Status Information

In the monitor section of the WPC program status information is displayed about the state of inputs, outputs the controllers and the unit itself. Green lights display positive information (ready states), yellow indicates that definable monitoring ranges have been reached and red indicates that faults have been detected. Tool tip texts appear when hovering the mouse over the indicators.

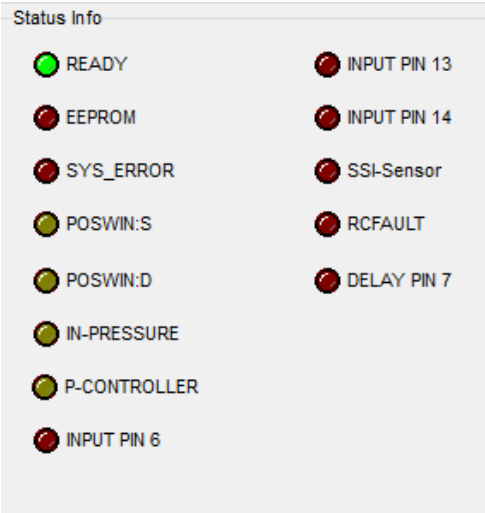

READY	General operational readiness
EEPROM	data error, press SAVE to store the values
SYS_ERROR	system error
POSWIN:S	the axis is in the stationary target window
POSDWIN:D	the axis is in the dynamic target window
IN-PRESSURE	the pressure is in the target window
P-CONTROLLER	the pressure controller has taken over
INPUT PIN 6	input error of the 4… 20 mA signal
INPUT PIN 13	input error of the 4… 20 mA signal
INPUT PIN 14	input error of the 4… 20 mA signal
SSI-SENSOR	input error of the SSI interface
RCFAULT	separation of WPC when RC mode is active
DELAY PIN 7	HW - Start for synchronization is delayed

7 EtherCAT IO interface

7.1 ETHERCAT CoE

EtherCAT is an ethernet-based field bus system, developed by Beckhoff and the EtherCAT Technology Group (ETG). EtherCAT is an open technology standardized in the international standards IEC 61158 and IEC 61784 as well as in ISO 15745-4. EtherCAT can provide the same communication mechanisms as are known from CANopen: object directory, PDO (process data objects) and SDO (service object objects). Even network management is comparable. For example, EtherCAT can be implement on devices that were previously equipped with CANopen with minimal effort; large parts of the CANopen firmware are reusable. The objects can optionally be expand to take account of the larger bandwidth of EtherCAT.

In order to create a user-friendly interface for device operation, different organizations have created various standards in which the following are defined:

- The device classes that exist (e.g.: class ‘rotary encoder’, ‘analogue input module’).
- The parameters that each representative of such a class has (obligatory and optional elements).
- The place where these parameters are to be found and the mechanism with which they are to be changed.

EtherCAT follows the so called CoE standard here: Can-Application-protocol-over-EtherCAT.
The process data objects (PDO) are used for the fast and efficient exchange of real-time data (for example I / O data, setpoints or actual values). In the EtherCAT telegram, no objects are addressed but the contents of the process data are sent directly from previously mapped parameters.

7.2 EtherCAT installation

EtherCAT supports almost any topology, Line, tree or star. The bus or line structure known from the fieldbuses thus also becomes available for Ethernet. Particularly useful for system wiring is the combination of line and junctions or stubs. The required interfaces exist on the couplers; no additional switches are required. Naturally, the classic switch-based Ethernet star topology can also be used.
The permissible cable length between two EtherCAT devices must not exceed 100 meters. This results from the FastEthernet technology, which mainly for reasons of signal attenuation over the Line length allows a maximum link length of 5 + 90 + 5 m if lines with appropriate properties.
To connect EtherCAT devices, use only Ethernet (cable + plug) connections at least of category 5 (CAT5) according to EN 50173 or ISO / IEC 11801. EtherCAT uses four wires of the cable for signal transmission. EtherCAT uses RJ45 connectors, for example. The contact assignment is the Ethernet standard (ISO / IEC 8802-3) is compatible.

7.3 EtherCAT access handling

The input and output data of the EtherCAT slave are displayed as CANopen Process Data Objects (PDO). The process data (PDOs) cyclically transmitted by an EtherCAT slave are the user data. They are expected or sent to the slave in the application. For this purpose, the EtherCAT Master (Beckhoff TwinCAT) parameterizes each EtherCAT slave during the start-up phase. It specifies the process data (size in bits / bytes, source location, transmission type) from or to the slave would like.
With so-called "intelligent" EtherCAT devices, the process data information is also available in the CoE directory. However, any changes in this CoE directory which lead to deviating PDO settings prevent the slave from booting successfully. It is not recommended to configure other than the intended process data, since the device firmware (if available) is tuned to these PDO combinations.

Object list:

- Index objectindex PDO
- Subindex subindex PDO
- Name surname of PDO
- Flag RW read or write status of PDO
- Flag RO read only status of PDO, it is not possible to write data to the object
- Flag P an additional P characterizes the object as a process data object
- Value value of the object

7.4 EtherCAT device profiles (ESI)

The ‘ESI file (CoE directory) is provided by the manufacturer of an EtherCAT device.
It is create in the description language XML and has a standardized format for the description of devices.
The ESI file contains information about:

- Description of the file (name, version, creation date, etc.)
- General device information (manufacturer name and code)
- Device name and type, versions
- Description of the supported objects by their attributes

Localisation in the EtherCAT Slave:

The CoE directory as a parameter system must be administrated in the device in the firmware (FW) in the local controller. This is the so-called online directory, because it is only available to the user if the EtherCAT slave is in operation with operating voltage supplied and, if applicable, can be manipulated via EtherCAT communication. So that the parameters can be viewed and changed in advance without the presence of a slave, a default copy of the entire directory is usually stored in the device description file ESI (XML). This is called the offline directory. Changes in this directory do not affect the later operation of the slave with Twin-CAT.

The ESI description also defines the process image, the communication type between master and slave/device and the device functions, if applicable. The physical device (firmware, if available) has to support the communication queries/settings of the master. This is backward compatible, i.e. newer devices (higher revision) should be supported if the EtherCAT master addresses them as an older revision.

The ranges in the Slave CoE that are important for the application-oriented EtherCAT fieldbus user are

• 0x1000: This is where fixed identity information for the device is stored, including name, manufacturer, serial number etc., plus information about the current and available process data configurations.
• 0x8000: This is where the operational and functional parameters for all channels are stored, such as filter settings or output frequency. The following ranges are also of interest
• 0x4000: In some EtherCAT devices the channel parameters are stored here (as an alternative to the 0x8000 range).
• 0x6000: Input PDOs ("input" from the perspective of the EtherCAT master)
• 0x7000: Output PDOs ("output" from the perspective of the EtherCAT master)

This device series uses a universal gateway in which all data is transferred to the input PDO and output PDO area. The parameterization of individual parameters can also be done via this. This keeps the interfaces compatible with other fieldbus topologies.

7.5 Standard Objects

Index Subi.	Name	Description	Type	Flags	Default
1000	Device Type	Device type of the EtherCAT slave	UINT32	RO	0x00000000
1008	Manufacturer Device Name	Device name of the EtherCAT slave	STRING	RO	UHC-126-U-ETC
1009	Hardware version	Hardware version of the EtherCAT slave	UINT16	RO	0x0014
100A	Software version	Software version of the EtherCAT slave	UINT16	RO	0x001e
1018:0	Identity	Information to identify the slave	UINT8	RO	0x04
1018:1	Vendor ID	Manufacturer ID of the EtherCAT slave	UINT32	RO	0x000005ae
1018:2	Poduct code	Product code of the EtherCAT slave	UINT32	RO	0x00000020
1018:3	Revision number	Revision number of the EtherCAT slave	UINT32	RO	0x00000001
1019:4	Serial number	Serial number of the EtherCAT slave	UINT32	RO	0x00000000

8 ProfiNet IO RT interface

8.1 PROFINET IO function

PROFINET is the standard for industrial ethernet based on IEEE 802.xx. PROFINET is based on the 100 Mb/s-version of full-duplex and switched Ethernet. PROFINET IO is designed for the fast data exchange between Ethernet-based controllers (master functionality) and field devices (slave functionality) with cycle times up to 8 ms.

8.2 ProfiNet Installationguide

The ProfiNet IO field devices are connected exclusively via switches as network components. A ProfiNet IO network can be set up in star, tree, line or ring topology. ProfiNet IO is based on the Fast Ethernet standard transmission with 100 Mbit / s. The transmission media are copper cables CAT5.

For the IP20 environment in the control cabinet, the RJ45 connector CAT5 according to EN 50173 or ISO / IEC 11801 is used. The pin assignment is compatible with the Ethernet standard (ISO / IEC 8802-3).

The connection between ProfiNet participants is called ProfiNet Channel. In most cases, ProfiNet channels are built with copper cables to IEC 61784-5-3 and IEC 24702. The maximum length of a ProfiNet channel, which is constructed with copper cables, is 100 m.

8.3 PROFINET address assignment

All PROFINET IO slave devices need name and IP address to initiate communication.

Both are assigned to the device by the ProfiNet-IO-controller (PLC). The device name of the PROFINET IO device is stored in persistent memory in the device. It can be modified by a Profinet IO supervisor, e.g. the programming system of the belonging PLC.

Default address:	
IP Address:	0.0.0.0
Subnet-Mask:	0.0.0.0
IP Address Gateway:	0.0.0.0

Address Example.:	
IP Address:	192.168.1.111
Subnet-Mask:	255.255.255.0
IP Address Gateway:	192.168.1.111

8.4 Device data file (GSDML)

The characteristics of an IO device are described by the device manufacturer in a General Station Description (GSD) file. The language used for this purpose is the GSDML (GSD Markup Language) - an XML based language. For I/O data, the GSDML file describes the structure of the cyclic input and output data transferred between the Programmable Controller and the PROFINET IO device. Any mismatch between the size or structure of the input and output data and the actual internal device structure generates an alarm to the controller.

In the configuration of transmission data select 32 bytes for input and 32 bytes for output.

9 Profibus Interface

9.1 Profibus function

The Profibus module supports all baud rates from 9,6 kbit/s up to 12000 kbit/s with auto detection of the baud rate. The functionality is defined in IEC 61158. The Profibus address can be programmed by a terminal program, WPC-300 or online via the Profibus. A diagnostic LED indicates the online status.

9.2 Installation

A typical screened Profibus plug (D-Sub 9pol with switchable termination) is mandatory. Every Profibus segment must be provided with an active bus termination at the beginning and at the end. The termination is already integrated in all common Profibus plugs and can be activated by DIL switches. The bus determina-tion needs a 5 Volt power supply for the correct function, which is supplied at PIN 6 of the D-sub-socket. The Profibus cable has to be screened at the determined contact clips in the Profibus plug.

9.3 Device data file (GSD)

The Profibus-DP features are documented in a device-data-file. Structure, content and code of this file (GSD) are standardized. They allow the projecting of any DP-slaves with projecting devices of several producers.

The GSD-data are read by a PROFIBUS-Master-configuration software and the correspondent settings are given to the master.

Enclosed is also the identification number of the Profibus knot. It is necessary for a master without significant report overhead to identify the types of the connected devices.

The GSD-file is available at the address: https://www.w-e-st.de/files/software/hms_1810.gsd

File: **hms_1810.gsd**

In the setting of the transfer bytes, 32 bytes (16 words consistent) are necessary as IN/OUT variables.

10 Process data

Positioning resolution of 1 µm (independent from the real sensor resolution), max. 0x989680 (10.000.000) is used. The command position is limited by the parameter SYSRANGE.

The command speed is interpreted in percentage of the programmed speed or of the output signal. The value of 0x3fff corresponds with 100 % speed.

10.1 Input from Fieldbus

The module is control with control PDO consisting of following bytes, a 32 Byte data frame is in use.

Index Subi.-ETC	Name	Description
7000:1	Control_1	Control bits for enabling, starting and motion control of the axis.
7000:2	Control_2	Control bits to the used controllers.
7000:3	Control_3	Control bits mainly for positioning behavior (driftcomposition, fine positioning ...).
7000:3	Control_4	Parameter functions
7010:1	Position_1	Position that is approached after "START". (Resolution 1 µm).
7010:2	Speed_1	Specifies the maximum possible velocity of the axis. 3FFF allow 100%, if it allows the controller parameterization. The limitation also applies to manual operation. If the limit here is lower, the set hand speed is not reached.
7010:5	Pressure	Pressure setpoint with a resolution of 0.1 bar
7010:6	Lag	Starting delay (synchronisation) in 0.01 mm
7030:1...10	R-Byte	not in use
7040:1	PARA-VALUE	New value of a parameter to be changed via the bus
7040:2	PARA-INDEX	Address of the parameter to be changed

No.	Byte	Function	Type	Range	Unit
1	0	Control_1	UINT8		
2	1	Control_2	UINT8		
3	2	Control_3	UINT8		
4	3	Control_4	UINT8		
5	4	Position 1 High (MSB)	UINT32	0… 10000000	0,001 mm
6	5	- - -			
7	6	- - -			
8	7	Position 1 Low (LSB)			
9	8	Velocity 1 High	UINT16	0… 0x3fff (0… 100 %)	-
10	9	Velocity 1 Low			
11	10				
12	11				
13	12				
14	13				
15	14				
16	15				
17	16	Command pressure High	UINT16	0,1…10000	0,1 bar
18	17	Command pressure Low			
19	18	Lag preset High	UINT16	0…60000	0,01 mm
20	19	Lag preset Low			
21	20				
22	21				
23	22				
24	23				
25	24				
26	25				
27	26	Parameter value High (MSB)	UINT32	value of a parameter to be changed via the bus	Parameter-dependent
28	27	- - -			
29	28	- - -			
30	29	Parameter value Low (LSB)			
31	30	Parameter address High	UINT16		hex
32	31	Parameter address Low			

Description of the control byte 1

No	Bit	Name	Description	Type	Default
1	0	DIRECT	In direct mode new command positions are taken over directly from the controller while START signal is available.	BOOL	0
2	1	FF_ENABLE	Activation of feedforward control to reduce the lag	BOOL	0
3	2	A_ENABLE	Activation acceleration feedback	BOOL	0
4	3	---		BOOL	0
5	4	HAND:B	Manual mode. The axis is driven with the preset speed (parameter with the same name). This mode can only be used when ENABLE is available and the START comand is not set.	BOOL	0
6	5	HAND:A	Manual mode, see HAND:B. Two parameters are available for this mode in order to provide different speeds for both directions	BOOL	0
7	6	START	Start signal for positioning. The actual transmitted position value is taken over and the output will be controlled relating to the parameterization.	BOOL	0
8	7	ENABLE	General activation of the axis. Malfunction monitoring and output signal get activated (in combination with the hardware enable)	BOOL	0

Description of the control byte 2

No	Bit	Name	Description	Type	Default
1	0	SYNC_halt	As long as this control bit is set, a loss of the "START" does not lead to a change of state, only the profile generator is stopped	BOOL	0
2	1	SYNC_tick	Synchronisation - Bit (is returned and signals that the position setpoint has been read)	BOOL	0
3	2	SYNC_mode	Activating the synchronisation mode	BOOL	0
4	3	MR	Aktivation of the MR controller	BOOL	0
5	4	PQ_Only	The position controller in deactivated. The maximum output (to influence the speed) is set via speed setpoint 1.	BOOL	0
6	5	PQ_Sel	Changeover between parameter set 1 (signal 0) and 2 (signal 1).	BOOL	0
7	6	PQ_Inverse	Inverts the effective direction of the pressure controller	BOOL	0
8	7	PQ_Active	Activates the pressure controller	BOOL	0

Description of the control byte 3

No	Bit	Name	Description	Type	Default
1	0	LIVEBIT	Starts communication and serves as watchdog	BOOL	0
2	1	---		BOOL	0
3	2	---		BOOL	0
4	3	---		BOOL	0
5	4	---		BOOL	0
6	5	DC_FREEZE	Storing of the drift compensation value as offset for the output.	BOOL	0
7	6	DC_ACTIVE	Drift compensation function (look at chapter drift compensation).	BOOL	0
8	7	F_POS	Fine positioning function (look at chapter drift compensation).	BOOL	0

Description of the control byte 4

No	Bit	Name	Description	Type	Default
1	0	---		BOOL	0
2	1	---		BOOL	0
3	2	---		BOOL	0
4	3	---		BOOL	0
5	4	---		BOOL	0
6	5	PARAREAD	Read out a parameter value. Reads out the value of the parameter which is determined by PARA ADDRESS and returns this value in PARA VALUE of the data sent to the fieldbus. If the address is not valid the function will return „0xffffffff".	BOOL	0
7	6	PARAVALID	Parameter valid for programming (change low to high)	BOOL	0
8	7	PARAMODE	Activation of the parameterizing mode	BOOL	0

Description of the LIVEBIT

The fieldbus communication can be monitored with the Livebit functionality.

If this bit is set to "TRUE", an internal monitoring function is activated.

After a single triggering of this control bit, a permanent change of the value must take place. It is monitored cyclically that this input value is changed at least once per second by the fieldbus. After expiration of this time without data change the READY state of the module is exited. The state of the bit is continuously reported back via LIVEBIT OUT.

10.2 DATA sent to Fieldbus

Process data such as current position, internal position, a 32 Byte data frame is in use.

Index Subi.-ETC	Name	Description
6000:1	Status_1	The state of the module is reported via status bits. The status byte 1 contains information about the position controller.
6000:2	Status_2	The status bit field displays information about the status of the pressure regulator.
6000:3	Status_3	Bit field 3 shows general errors.
6000:4	Status_4	Livebit / parameter write flags
6010:1	Feedback_Position	The position sensor of the axis is placed on this PDO in a resolution of 1 µm.
6010:2	Internal_Position	The position setpoint generated in the module is applied to this PDO. Resolution 1 µm.
6010:3	Control_Error	Control deviation of the position in a resolution of 1 µm
6010:4	Differential_Pressure	Differential pressure of both pressure sensors Pressure (X1-X2) considering the cylinder area ratio
6010:5	Feedback_Pressure_X1	Actual value of the first pressure sensor X1 (resolution 0.1 bar).
6010:6	Feedback_Pressure_X2	Actual value of the second pressure sensor X2 (resolution 0.1 bar).
6020:1	Additional_Value_1	Optional value, selection by command "SELPLUS:1 x
6020:2	Additional_Value_2	Optional value, selection by command "SELPLUS:2 x
6030:1...2	R-Byte	not in use
6040:1	PARA-VALUE	Retrieved value of the parameter to be read

No.	Byte	Function	Type	Range	Unit
1	0	Status_1	UINT8		
2	1	Status _2	UINT8		
3	2	Status _3	UINT8		
4	3	Status _4	UINT8		
5	4	Feedback position Hi (MSB)	UINT32	0… 10000000	0,001 mm
6	5	…			
7	6	…			
8	7	Feedback position Lo (LSB)			
9	8	Internal command position Hi (MSB)	UINT32	0… 10000000	0,001 mm
10	9	…			
11	10	…			
12	11	Internal command position Lo (LSB)			
13	12	Control error Hi (MSB)	UINT32	0… 10000000	0,001 mm
14	13				
15	14	…			
16	15	… Control error Lo (LSB)			
17	16	Differential pressure feedback High	UINT16	+/- 10000 0xc000… 0x3fff	0,1 bar %
18	17	Differential pressure feedback Low			
19	18	Feedback pressure X1 (MSB)	UINT16	0…10000 0… 0x3fff	0,1 bar %
20	19	Feedback pressure X1 (LSB)			
21	20	Feedback pressure X2 (MSB)	UINT16	0…10000 0… 0x3fff	0,1 bar %
22	21	Feedback pressure X2 (LSB)			
23	22	Additional output value 1 (MSB)	INT16	See Command Table in 5.7.11	
24	23	Additional output value 1 (LSB)			
25	24	Additional output value 2 (MSB)	INT16	See Command Table in 5.7.11	
26	25	Additional output value 2 (LSB)			
27	26				
28	27				
29	28	Read out parameter value Hi	UINT32		Same as parameter
30	29	…			
31	30	…			
32	31	Read out parameter value Lo			

Description of the status byte 1:

No	Bit	Name	Description	Type	Default
1	0	---		BOOL	0
2	1	---		BOOL	0
3	2	---		BOOL	0
4	3	---		BOOL	0
5	4	PROFIL_2	2nd speed (position) segment is active	BOOL	0
6	5	POSWIN:S	position within the target window	BOOL	0
7	6	POSWIN:D	In-Position-Window (in NC-mode, following error window)	BOOL	0
8	7	READY	System is enabled and no errors are detected	BOOL	0

Description of the status byte 2:

No	Bit	Name	Description	Type	Default
1	0	---		BOOL	0
2	1	---		BOOL	0
3	2	---		BOOL	0
4	3	---		BOOL	0
5	4	---		BOOL	0
6	5	---		BOOL	0
7	6	PRESSWIN	Pressure control error within the programmed boundary	BOOL	0
8	7	PQ-ACTIVE	Pressure limitation control is active, the position loop is overridden	BOOL	0

Description of the status byte 3:

No	Bit	Name	Description	Type	Default
1	0	-		BOOL	0
2	1	P_ERROR_2	Error at the analog pressure sensor (no 4…20 mA) **Attention**: Inverted signal, an error exists if the bit is **not** set.	BOOL	0
3	2	P_ERROR_2	Error at the analog pressure sensor (no 4…20 mA) **Attention**: Inverted signal, an error exists if the bit is **not** set.	BOOL	0
4	3	SSI_ERROR	Error at the digital position encoder (SSI) **Attention**: Inverted signal, an error exists if the bit is **not** set.	BOOL	0
5	4	X_ERROR	Error at the analog position sensor (no 4…20 mA) **Attention**: Inverted signal, an error exists if the bit is **not** set.	BOOL	0
6	5	BUFF_OVF	Data overflow in the fieldbus (signal 0) **Attention**: Inverted signal, an error exists if the bit is **not** set.	BOOL	0
7	6	CHKERROR	Check sum error in the data transmission (signal 0) **Attention**: Inverted signal, an error exists if the bit is **not** set.	BOOL	0
8	7	DERROR	EEPROM error (signal 0) **Attention**: Inverted signal, an error exists if the bit is **not** set.	BOOL	0

Description of the status byte 4:

No	Bit	Name	Description	Type	Default
1	0	LIVEBIT_OUT	Feedback (= LIVEBIT), monitoring of the communication	BOOL	0
2	1	SYNC_tick	Return of the SYNC - bit, indicates that the setpoint was transferred.	BOOL	0
3	2	DEV_OK	Control deviation can be used for external synchronisation monitoring	BOOL	0
4	3	---		BOOL	0
5	4	---		BOOL	0
6	5	---		BOOL	0
7	6	PARA-RDY	A parameter value has been transferred correctly	BOOL	0
8	7	PARA-ACT	The parameter mode is active	BOOL	0

11 Parameterization via Fieldbus

11.1 Procedure

Preparation:

- Power supply of the different sections has to be available.
- For safety issues the system should not be active.
  If active, the ENABLE bit in the control word has to be reset.

  Attention: Parameterization via fieldbus can also be done having an active system. In this case it should be done very carefully because changes are directly operative.

Parameterization:

- At first the **PARA MODE** bit has to be set to enable parameterizing via ProfiNet.
  This will be reported via the **PARA ACTIVE** bit.
- Pretend **address** and new **value** of the parameter which should be changed.
- Setting the **PARA VALID** bit to high will transmit the data.
  The **PARA READY** bit will report a successful parameterization.

  Attention: A missing **para ready** bit means parameterization was not done.

Storing:

- Same procedure as parameterizing standard parameters.
- Selecting **2100** as **address**, written **value** does not matter (below 60000).

Password protection:

- If a password was set this has to be entered first for enabling parameterization. Procedure is the same as when parameterizing standard parameters.
- Select **2200** as **address** and send the password (PASSFB) as **value**.
- After **PARA READY** reports success, subsequently parameterizing can be done as long as **PARA MODE** stays active. After resetting it password has to be renewed when it gets activated again.

If the password was transferred incorrect three times, the parameterization mode gets locked (reported by deactivated **PARA ACTIVE** bit). Only restarting the device enables three new attempts for enabling.

Please note that a storage of the parameterization via the Profinet is limited in the number of writing cycles. Means it should be done only when necessary.

11.2 Parameter list

The following table shows the parameter which can be changed through the fieldbus and their addresses:

Parameter table			
No.	**Index**	**Parameter**	**Description**
1	0x2005	SYNCWIN	Monitoring window for EMR
2	0x2006	MR:T1	Filter constant 1 of the MR-controller
3	0x2007	MR:T2	Filter constant 2 of the MR-controller
5	0x2010	V0:A	Loop gain direction A
6	0x2011	V0:B	Loop gain direction B
7	0x2012	V0:A_R	Loop gain direction A (if pressure feedback is active)
8	0x2013	V0:B_R	Loop gain direction B (if pressure feedback is active)
9	0x2014	ACCEL	Specified acceleration
10	0x2017	OFFSET:X	Sensor Offset
11	0x2018	SETZERO[14]	Zero point adjustment
12	0x2021	CTRL	Deceleration behavior: 1 = LIN; 2 = SQRT1, 3 = SQRT2
13	0x2022	FF:A	Speed feed forward direction A
14	0x2023	FF:B	Speed feed forward direction B
15	0x2024	PT1	PT1 filter position controller
16	0x2025	C:KPR	Gain pressure feedback
17	0x2026	C:PT1	PT1 pressure feedback
18	0x2040	F_OFFSET	Offset pressure input
19	0x2041	RA:UP	Ramp up for pressure setpoint
20	0x2042	RA:DOWN	Ramp down for pressure setpoint
21	0x2050	C1:P	P- value for pressure controller, Set 1
22	0x2051	C1:I	I- value for pressure controller, Set 1
23	0x2052	C1:D	D- value for pressure controller, Set 1
24	0x2053	C1:D_T1	PT1-filter, Set 1
25	0x2054	C1:I_ACT	Activation value in %, Set 1
26	0x2055	C2:P	P-value for pressure controller, Set 2
27	0x2056	C2:I	I- value for pressure controller, Set 2
28	0x2057	C2:D	D-value for pressure controller, Set 2
29	0x2058	C2:D_T1	PT1-filter, Set 2
30	0x2059	C2:I_ACT	Activation value in %, Set 2
31	0x2070	MIN:A	Deadband compensation, direction A
32	0x2071	MIN:B	Deadband compensation, direction B
33	0x2074	TRIGGER	Response threshold for the MIN parameter
34	0x2075	OFFSET	Valve adjustment
35	0x2076	SELPLUS:1	Selection of additional signals via fieldbus:
36	0x2077	SELPLUS:2	empty = 1 | E_S = 2 | CS = 3 | WP = 4 | EP = 5 | CP = 6 | U = 7 | VACT = 8
37	0x2100	SAVE	Save the parameter set
38	0x2200	PW	Password for parameterization

[14] Writing on this value with the value "1" has the consequence that the value OFFSET:X is adjusted at this moment so that the new measured value is "0 mm" (zero point adjustment).

12 Profinet-Driver Blocks for Simatic-Controllers

12.1 Installation of the programme modules /configuration of the system

For use within the „TIA Portal“ software we provide driver blocks that enable a convenient access out of the application program:

a) The FB WEST_UHC_SYNC_AXIS as driver for the axes cards for controllers of the S7-1200 and -1500 series
b) The FB WEST_UHC_SYNC_AXIS_TIA_KLASSIK as driver for the axes cards for controllers of the S7-300 and -400 series
c) The FB UHC_SYNC_MASTER for higher-level coordination
d) A SYNC_SIGNALS data type that defines the exchange between these FBs

By importing the source "UHC_SYNC.scl" these elements are inserted into your project as external source, afterwards the blocks are to be generated from this (context menu when right-clicking on the source).

Depending on the target system, a) or b) can then be deleted from the "blocks" folder.

The next steps:

1.) Import the GSDML-file
2.) Project the connection between PLC and controller card via Profinet:

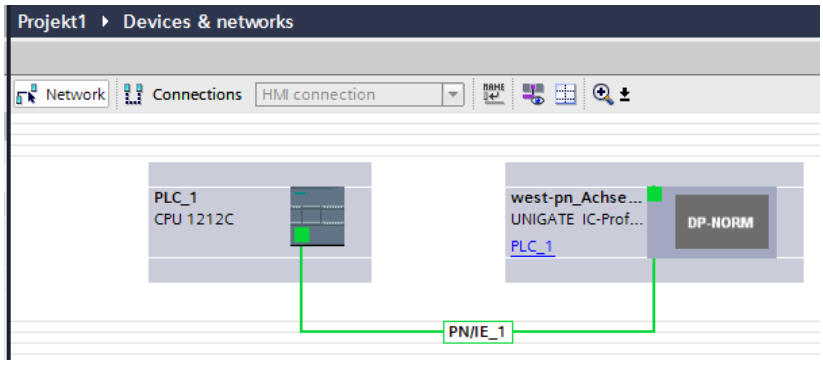

3.) Assemble a module „IN/OUT 32 bytes“:

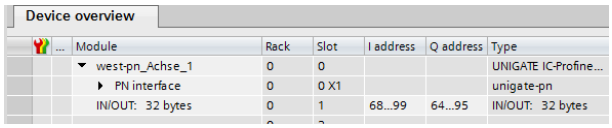

Device overview

Module	Rack	Slot	I address	Q address	Type
west-pn_Achse_1	0	0			UNIGATE IC-Profine...
PN interface	0	0 X1			unigate-pn
IN/OUT: 32 bytes	0	1	68...99	64...95	IN/OUT: 32 bytes

The addresses will be assigned automatically. Important for the link of the program block is the hardware identifier, which is also assigned automatically. This only applies if a S7-1200 / -1500 controller is used.

To determine the identifier right-click in the project tree on the device, choose “properties” and take over the number which is displayed in the tab “System constants”:

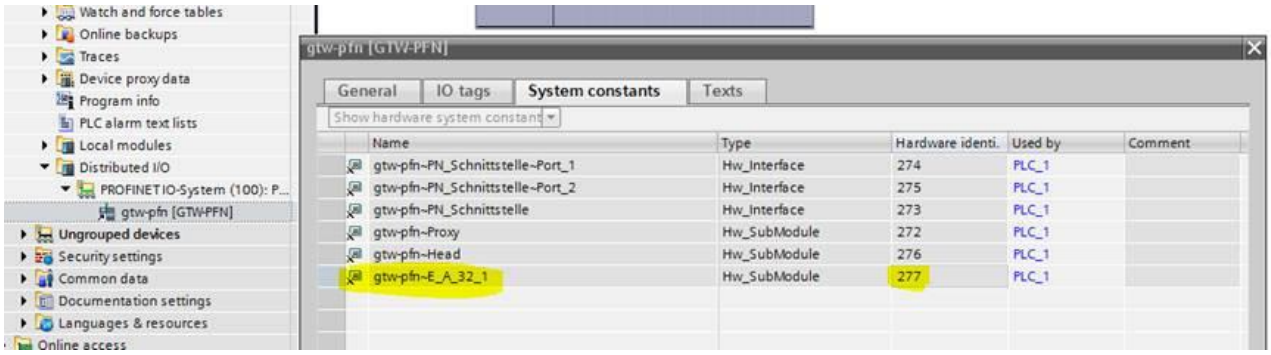

If a controller of the S7-300 and -400 series is used, the input and output addresses of the I/O-Module are the required information for the driver block:

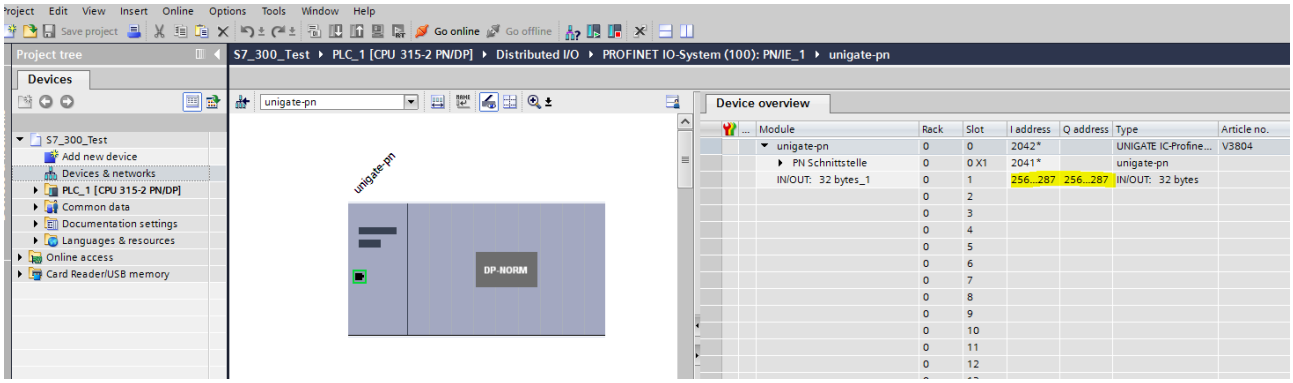

12.2 Description of the blocks:

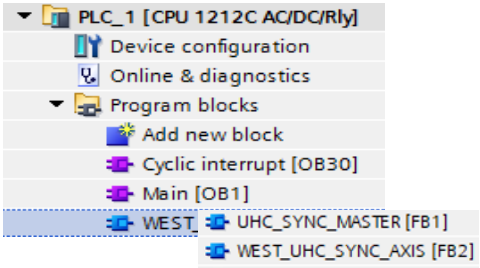

This FB can now be called out of the application program. This should happen in a cyclic interrupt with an execution time >= 8 ms.

The imported FBs can now be called up in the user program. This should be done in a cyclic interrupt OB with a cycle time >= 8 ms.
For each axis, one instance of the axis block is called there and, in addition, a higher-level instance of the master block is called. The designation "master block" has nothing to do with the function of an axis as an encoder of the start signal (PIN2). The corresponding axis is assigned an axis block just like the others.
The data exchange between the blocks is carried out via the I/O parameters SYNC of the axis blocks, which are connected to the element "SYNC" in the instance data block of the master FB:

View of an AXIS driver block in FBD:

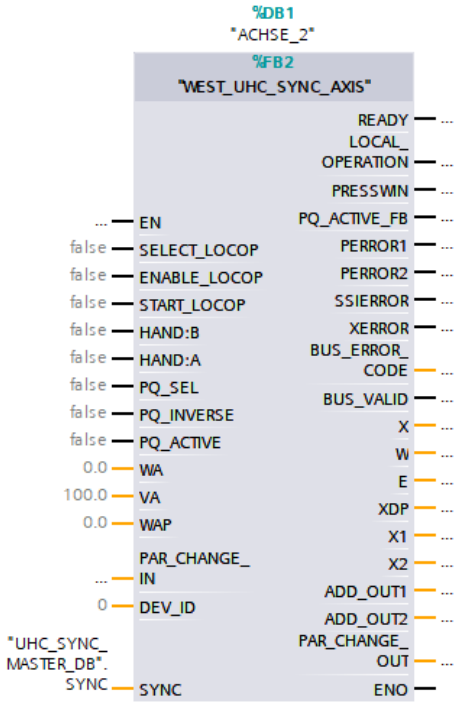

The master block:

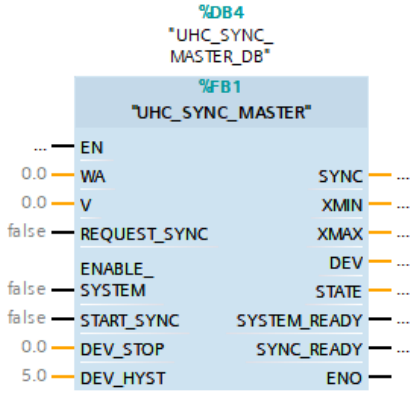

The axis block can be switched to a local operating mode without synchronisation via the "SELSECT_LOCOP" input, e.g. for set-up or commissioning.

Only in this situation, which is reported via the output "LOCAL_OPERATION", certain input signals are effective, such as ENABLE, START, the manual commands and the specifications for V and WA. The control bits for the pressure controller and its setpoint are always sent to the controller from the inputs of the axis modules, regardless of the operating mode.

Please refer to the tables on the following pages to find a description of the parameters.

WEST_UHC_SYNC_AXIS		
Parameter	**Type**	**Description**
SELECT_LOCOP	IN / BOOL	Selection of individual operation. This is blocked by the master if necessary. See also output "LOCAL_OPERATION".
ENABLE_LOCOP	IN / BOOL	Release signal "ENABLE" to the axis module when the individual operation is activated. Otherwise the ENABLE signal of the UHC_SYNC_MASTER block is passed on to the assembly.
START_LOCOP	IN / BOOL	Start signal to the axis module when single operation is activated. Otherwise, the START signal of the UHC_SYNC_MASTER block is passed on to the assembly.
HAND:B HAND:A	IN / BOOL	Manual commands to the module. Are only transmitted in individual operation.
PQ_SEL PQ_INVERSE PQ_ACTIVE	IN / BOOL	Control bits for the pressure controller of the module. Transmission independent of the mode individual / synchronous operation.
WA	IN / REAL	Target position for positioning in individual operation [mm].
V	IN / REAL	Set speed for individual operation [%].
WAP	IN / REAL	Setpoint for the pressure controller [bar].
PAR_CHANGE_IN	IN / STRUCT	Control bits and associated values for parameterisation via the field bus, combined into one structure for reasons of clarity.
DEV_ID *or*	IN / INT	HW identifier of the E_A_32 area in the device configuration for the corresponding axis module
ADR_IN ADR_OUT („TIA_KLASSIK“)	IN / INT	Start addresses of the input and output area in the device configuration.
SYNC	INOUT / STRUCT	Interface for overall coordination, to be linked to the SYNC entry in the instance data module of FB UHC_SYNC_MASTER
READY	OUT / BOOL	Operational readiness of the axis
LOCAL_OPERATION	OUT / BOOL	Feedback that the respective axis is now in the requested single operation. This blocks the synchronous operation of the entire system.
PRESSWIN	OUT / BOOL	Actual pressure value is within the pressure setpoint window
PQ_ACTIVE_FB	OUT / BOOL	Pressure controller of this axis is active, has taken over control
PERROR1	OUT / BOOL	Error pressure sensor 1
PERROR2	OUT / BOOL	Error pressure sensor 2
SSIERROR	OUT / BOOL	Error position sensor (SSI)
XERROR	OUT / BOOL	Error position sensor (analog)
BUS_ERROR_CODE	OUT / INT	Error code for diagnosis (see table)
BUS_VALID	OUT / BOOL	Bus coupling provides valid values
X	OUT / REAL	Actual position of this axis [mm].
W	OUT / REAL	Internal target position of this axis [mm].
E	OUT / REAL	Control deviation Position [mm]
XDP	OUT / REAL	Pseudo - differential pressure [bar]
X1 / 2	OUT / REAL	Pressure X1 / 2 [bar]
ADD_OUT1 / 2	OUT / REAL	Additional bus signals according to the parameterisation
PAR_CHANGE_OUT	OUT / STRUCT	Status bits and read parameter value of the function for parameterisation via the field bus, combined into a structure for clarity

If no "BUS_VALID" is signalled despite a correctly configured field bus connection, detailed error information can be taken from output "BUS_ERROR_CODE":

BUS ERROR CODE		
Nr.	**Bit**	**Function**
1	0	Internal data error (DERROR)
2	1	Checksum error ProfiNet (CHKERROR)
3	2	Data overflow ProfiNet (BUFFEROV)
4	3	Receive error (access to the input addresses, module -> PLC)
5	4	Transmission error (access to the output addresses, PLC -> module)
6	5	No data transmission (watchdog)
7	6	
8	7	

Master Block:

UHC_SYNC_MASTER		
Parameter	**Type**	**Description**
WA	IN / REAL	Target position [mm].
V	IN / REAL	Set speed [%]
REQUEST_SYNC	IN / BOOL	Request synchronous operation. Individual operation is blocked.
ENABLE_SYSTEM	IN / BOOL	Enable signal to all axis modules
START_SYNC	IN / BOOL	Start of a positioning process in synchronization (by rising edge)
DEV_STOP	IN / REAL	Deviation that causes the profile generators to halt (stop function, see 12.4)
DEV_HYST	IN / REAL	Hysteresis of the stop function [mm]
SYNC	OUT / STRUCT	For coupling the axis - FBs. Not intended for direct connection.
XMIN	OUT / REAL	Lowest position value of the connected axis modules [mm]
XMAX	OUT / REAL	Highest position value of the connected axis modules [mm]
DEV	OUT / REAL	Deviation between maximum and minimum lag for monitoring synchronism [mm].
STATE	OUT / INT	Current status of the internal state machine (diagnostic information)
SYSTEM_READY	OUT / BOOL	All modules in the system are ready for operation, a movement can be started
SYNC_READY	OUT / BOOL	Synchronising mode is active

12.3 Typical sequence of a synchronous positioning process

This diagram shows a typical signal curve (input and system response):

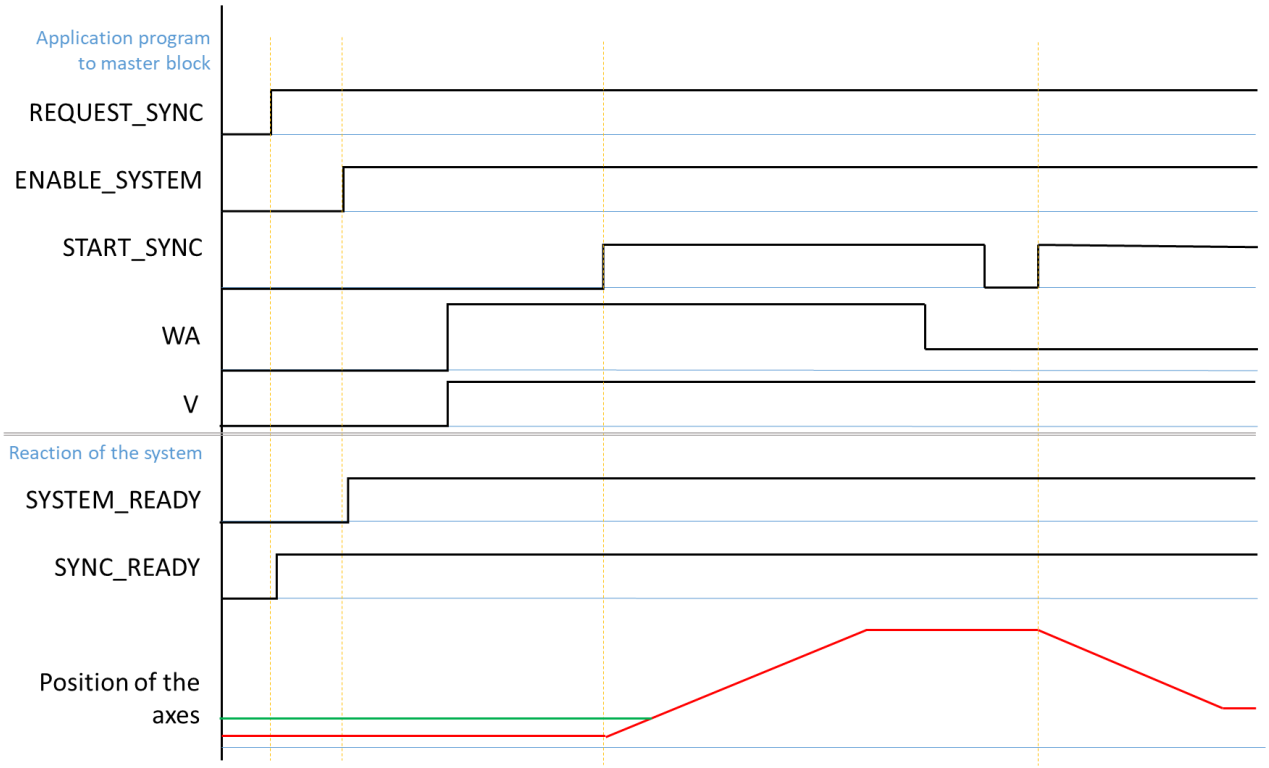

WA and V can be set to the setpoints of the first movement right at the beginning. The transfer takes place at the rising edge of " START_SYNC".

12.4 Behaviour in case of large lag of individual axes

There are situations in which individual axes can no longer achieve the specified speed. This happens, for example, if one of the pressure controllers intervenes or an axis is so heavily loaded that even the full valve opening is not sufficient to achieve the speed required by the profile.

Without further measures, the profile generators of the other axes will continue to run and thus a continuously increasing synchronisation deviation will occur. There are systems in which in such a case a switch-off by the synchronisation monitoring is the correct reaction. In other applications one would like the controller to actively limit the maximum deviation and after the blockage has been removed or the load situation or the pressure setpoint has changed, the movement is continued in synchronism.

In order to achieve this, a maximum permitted lag can be specified via the parameter "DEV_STOP". If this value is exceeded, all profile generators of the system stop simultaneously, so that the synchronisation deviation is also limited.

The parameter DEV_STOP must be specified in such a way that it is greater than the maximum desired lag E_S during operation at the maximum speed.

DEV_STOP works together with DEV_HYST, a switching hysteresis for the stop function. A stop is initiated when the largest amount of control deviation |E|,max > DEV_STOP + DEV_HYST and is withdrawn as soon as |E|,max < DEV_STOP - DEV_HYST.

DEV_HYST should be set so that there is no " fluttering" of the stop state, which can be noticed by the fact that the setpoint "W" of the axes seems to increase continuously with a reduced speed. The correct behaviour is when clear steps can be seen. This following figure shows an intervention of the function until a regular synchronism becomes possible again:

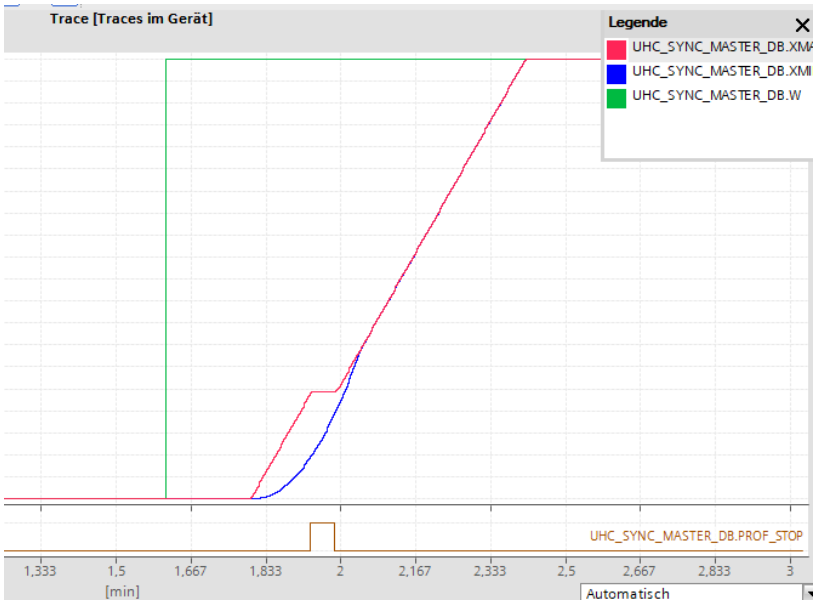

Red / blue = axis positions

Green = setpoint input WA

Brown = internal state "profiles stopped”

You can see that the "red" axis starts quickly at the beginning, while the "blue" axis is slowed down considerably by a very small control deviation of its pressure controller. This causes a deviation to build up. If the threshold value is exceeded, the "red" axis is stopped until the other axis has caught up and then the movement can be continued together.

13 Notes