W.E.ST. Elektronik GmbH

Technical Documentation

DSG-112-U
DSG-112-P

Freely configurable control module, alternatively with power output stage

CONTENTS

1 General Information 4
1.1 Order number 4
1.2 Scope of supply 4
1.3 Accessories 4
1.4 Symbols used 5
1.5 Using this documentation 5
1.6 Legal notice 5
1.7 Safety instructions 6
2 Characteristics 7
2.1 Device description 8
3 Use and application 9
3.1 Installation instructions 9
3.2 Method of operation 10
3.3 Commissioning 10
4 Technical description 11
4.1 Input and output signals 11
4.1.1 Connections 11
4.1.2 Scaling and Limiting 11
4.2 LED definitions 11
4.3 Circuit diagram 12
4.4 Typical wiring 13
4.5 Connection examples 13
4.6 Technical data 14
5 Parameters 15
5.1 Parameter overview 15
5.2 Basic parameters 16
5.2.1 MODE (Switching between parameter groups) 16
5.3 Common Settings 17
5.3.1 LG (language switching) 17
5.3.2 SENS (error monitoring) 17
5.3.3 PAR (free parameters) 18
5.3.4 MON (definition of the monitor signals) 18
5.4 Input and output configuration 18
5.4.1 SIGNAL (type of input and output signals) 18
5.5 Complex functions 19
5.5.1 CCSET (curve characteriser) 19
5.5.2 MIN/MAX (overlap compensation and scaling) 20
5.5.3 4 - Quadrant ramp 21
5.5.4 PI - Controller 21
5.6 Special Commands 22
5.6.1 DIAG (query of the last shutdown causes) 22
5.6.2 SC:CLEAR 22
5.6.3 SC:LIST 22
5.6.4 SC:I 23
5.7 PROCESS DATA (Monitoring) 23
5.7.1 Displayed values 23
5.7.2 RC - Mode 23
6 Script 25
6.1 Input and output signals for the script 25
6.2 Standard Script 26

6.3 Handling of the integrated complex functions ... 26
6.3.1 PI-Controller ... 26
6.3.2 4-Quadrant ramp ... 26
7 Appendix ... 27
7.1 Failure monitoring ... 27
8 ADDITIONAL INFORMATION: Power output stage ... 28
8.1 General function ... 28
8.2 Device description ... 29
8.3 Inputs and outputs ... 30
8.4 Circuit diagram ... 30
8.5 Typical wiring ... 31
8.6 Technical data ... 31
8.7 Parameters of the power stage ... 32
8.7.1 CURRENT (Rated solenoid current) ... 32
8.7.2 DFREQ (Dither frequency) ... 33
8.7.3 DAMPL (Dither amplitude) ... 33
8.7.4 PWM (PWM frequency) ... 33
8.7.5 ACC (Current loop auto adjustment) ... 34
8.7.6 PPWM (P gain of the current loop) ... 34
8.7.7 IPWM (I gain of the current loop) ... 34
8.8 Additional input and output signals for the script ... 35
8.9 Process data of the power stage ... 35
8.10 Standard Script ... 35
9 Notes ... 36

1 General Information

1.1 Order number

DSG-112-U - with two analogue outputs 0-10 V or 4... 20 mA, 4 analogue inputs, including one differential input, 4 digital inputs and 2 digital outputs

DSG-112-P - with integrated power output stage up to 2,6 A (*see additional information*)

1.2 Scope of supply

The scope of supply includes the module plus the terminal blocks which are part of the housing.
Interface cables and further parts which may be required should be ordered separately.
This documentation can be downloaded as a PDF file from www.w-e-st.de.

1.3 Accessories

WPC-300 - Start-Up-Tool (downloadable from our homepage – products/software)

Any standard cable with USB-A and USB-B connector can be used as the programming cable.

1.4 Symbols used

General information

Safety-related information

1.5 Using this documentation

This documentation is structured in such a way that the standard module is described up to chapter 7. Extensions that apply to the power output stage are described in chapter 8.

The script language and the handling of the associated PC software "WestScript" are described in a separate manual.

1.6 Legal notice

W.E.St. Elektronik GmbH

Gewerbering 31
D-41372 Niederkrüchten

Tel.: +49 (0)2163 577355-0
Fax.: +49 (0)2163 577355-11

Home page: www.w-e-st.de
EMAIL: contact@w-e-st.de

Date: 15.07.2022

The data and characteristics described herein serve only to describe the product. The user is required to evaluate this data and to check suitability for the particular application. General suitability cannot be inferred from this document. We reserve the right to make technical modifications due to further development of the product described in this manual. The technical information and dimensions are non-binding. No claims may be made based on them.

This document is protected by copyright.

1.7 Safety instructions

Please read this document and the safety instructions carefully. This document will help to define the product area of application and to put it into operation. Additional documents (WPC-300 for the start-up software) and knowledge of the application should be taken into account or be available.
General regulations and laws (depending on the country: e. g. accident prevention and environmental protection) must be complied with.

These modules are designed for hydraulic applications in open or closed-loop control circuits. Uncontrolled movements can be caused by device defects (in the hydraulic module or the components), application errors and electrical faults. Work on the drive or the electronics must only be carried out whilst the equipment is switched off and not under pressure.

This handbook describes the functions and the electrical connections for this electronic assembly. All technical documents which pertain to the system must be complied with when commissioning.

This device may only be connected and put into operation by trained specialist staff. The instruction manual must be read with care. The installation instructions and the commissioning instructions must be followed. Guarantee and liability claims are invalid if the instructions are not complied with and/or in case of incorrect installation or inappropriate use.

CAUTION!
All electronic modules are manufactured to a high quality. Malfunctions due to the failure of components cannot, however, be excluded. Despite extensive testing the same also applies for the software. If these devices are deployed in safety-relevant applications, suitable external measures must be taken to guarantee the necessary safety. The same applies for faults which affect safety. No liability can be assumed for possible damage.

Further instructions

- The module may only be operated in compliance with the national EMC regulations. It is the user's responsibility to adhere to these regulations.
- The device is only intended for use in the commercial sector.
- When not in use the module must be protected from the effects of the weather, contamination and mechanical damage.
- The module may not be used in an explosive environment.
- To ensure adequate cooling the ventilation slots must not be covered.
- The device must be disposed of in accordance with national statutory provisions.

2 Characteristics

This electronic module was developed as a universal control module. Its fast signal processing makes it ideal for hydraulic drive technology, but it can also be used universally in other industries and technologies.

The script-based programming is much easier to handle than a PLC programming language and allows typical requirements to be realised in the most compact way.

Further advantages are:

- Extremely fast processing in a 1 ms cycle
- Very simple structure of the commands, fast learning process
- Possibility of offline simulation of scripts even without hardware
- Closed loop control functions are possible, PI controller integrated

Typical applications: Rapid/creep speed controls, recallable speed or pressure setpoints, characteristic curve adjustments and signal range monitoring, time-controlled motion sequences, setpoint presets, general control functions, etc.

Features

- **Free configuration of arbitrary logic connections**
- **Self-monitoring**
- **Four - quadrant ramp**
- **PI - controller**
- **Input and output signal selection**
- **Parameters for valve adaptation (MIN, MAX, free characteristic)**
- **Overlap jump or kinked gain characteristics**
- **Error diagnostics and extended function check**
- **Simple parameterisation with WPC-300 and additional free of charge script programming software, incl. simulation option**
- **Optionally:**
  - **Integrated power output stage (P version)**

2.1 Device description

Standard module – for the P-version see chapter 7.2

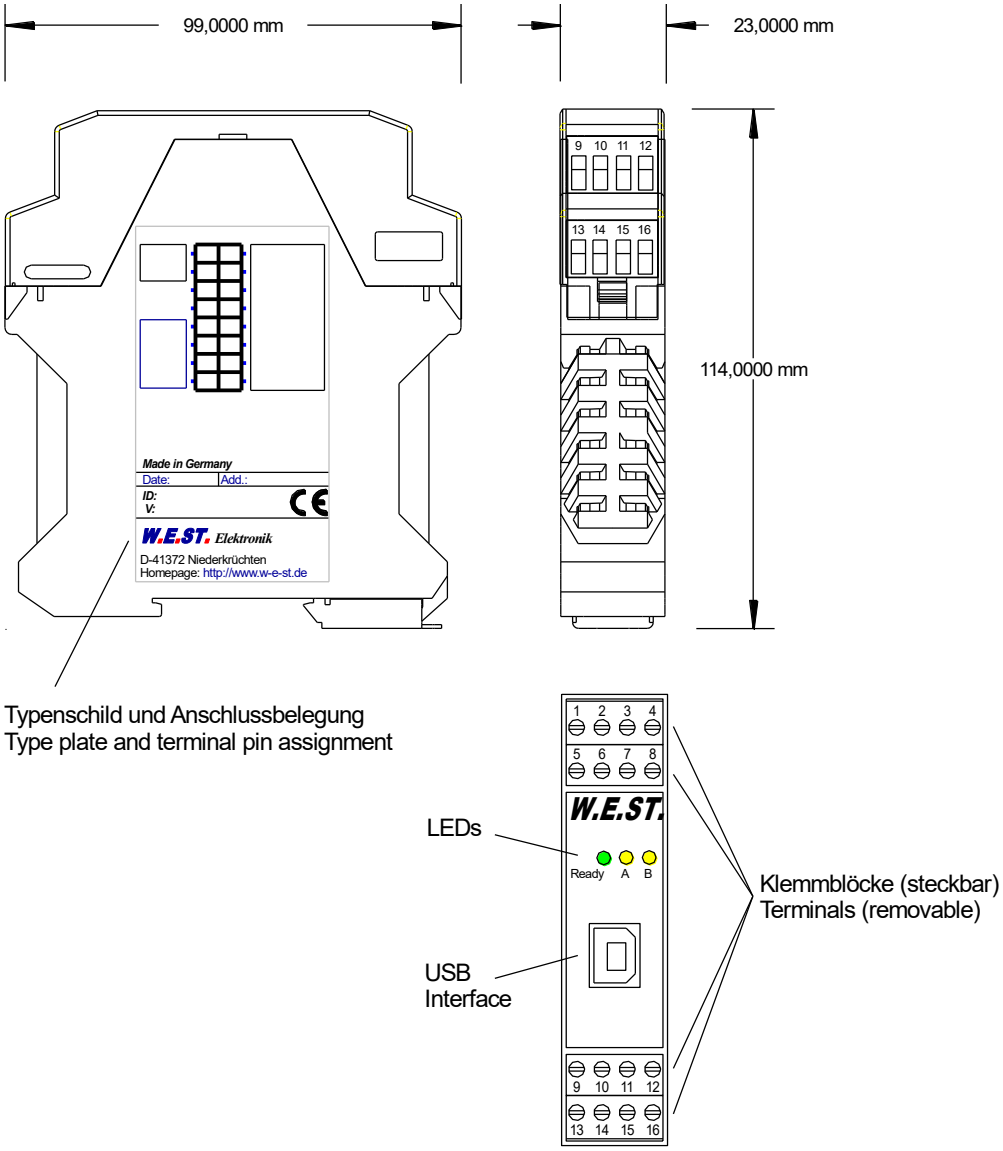

3 Use and application

3.1 Installation instructions

- This module is designed for installation in a shielded EMC housing (control cabinet). All cables which lead outside must be screened; complete screening is required. It is also necessary to avoid strong electro-magnetic interference sources being installed nearby when using our open and closed loop control modules.

- **Typical installation location:** 24 V control signal area (close to PLC)
  The devices must be arranged in the control cabinet so that the power section and the signal section are separate from each other.
  Experience shows that the installation place close to the PLC (24 V area) is most suitable. All digital and analogue inputs and outputs are fitted with filters and surge absorbers in the device.

- The module should be installed and wired in accordance with the documentation bearing in mind EMC principles. If other consumers are operated with the same power supply, a star-shaped ground wiring scheme is recommended. The following points must be observed when wiring:
  - The signal cables must be laid separately from power cables.
  - Analogue signal cables **must be screened**.
  - All other cables must be screened if there are powerful interference sources (frequency converters, power contactors) and cable lengths > 3 m. Inexpensive SMD ferrites can be used with high-frequency radiation.
  - The screening should be connected to PE (PE terminal) as close to the module as possible. The local requirements for screening must be taken into account in all cases. The screening should be connected to at both ends. Equipotential bonding must be provided where there are differences between the connected electrical components.
  - If having longer lengths of cable (> 10 m), the diameters and screening measures should be checked by specialists (e. g. for possible interference, noise sources and voltage drop). Special care is required if using cables of over 40 m in length, and if necessary the manufacturer should be consulted if necessary.

- A low-resistance connection between PE and the mounting rail should be provided. Transient interference is transmitted from the module directly to the mounting rail and from there to the local earth.
- Power should be supplied by a regulated power supply unit (typically a PELV system complying with IEC364-4-4, secure low voltage). The low internal resistance of regulated power supplies gives better interference voltage dissipation, which improves the signal quality of high-resolution sensors in particular. Switched inductances (relays and valve coils) which are connected to the same power supply must always be provided with appropriate overvoltage protection directly at the coil.

3.2 Method of operation

This module can be used as a universal setpoint control or amplifier module for a wide variety of applications.

The input signals are read in and are available to a freely configurable script for further processing.

The easy-to-use script language makes it possible to create very efficient programs without in-depth programming knowledge, which can be used to solve many different control and regulation tasks.

The unit also provides more complex functions, such as a PI controller, characteristic linearisation, ramp modules, timers, etc., which are predefined and can be used in the script.

The resulting signals from the script are sent out via configurable analogue outputs (voltage or current signals) and the two digital outputs.

3.3 Commissioning

Step	Task
Installation	Install the device in accordance with the circuit diagram. Ensure it is wired correctly and that the signals are well shielded. The device must be installed in a protective housing (control cabinet or similar).
Switching on for the first time	Ensure that no unwanted movement is possible in the drive (e. g. switch off the hydraulics). Connect an ammeter and check the current consumed by the device. If it is higher than specified, there is an error in the wiring. Switch the device off immediately and check the wiring.
Setting up communication	Once the power input is correct, the PC (notebook) should be connected to the serial interface. Please see the WPC-300 program documentation for how to set up communication. Further commissioning and diagnosis are supported by the operating software.
Loading a Script onto the Device	Use the WestScript.exe software to transfer the prepared script to the unit.
Pre-parameterisation	Some parameters are already known from the data sheets or the design, set them accordingly and select suitable initial values for the other parameters.
Check the input signals	Check whether the received sensor signals are plausible. Carry out all tests that are possible without operating the machine.
Switch on the system and optimise settings	Before switching on for the first time, ensure that no hazard can arise in the event of an unforeseen reaction. Ensure that it is possible to shut down the machine quickly. There must be no person in the danger zone. Optimise the parameters of your application while the machine is running.
Save parameters permanently	Use the "Save" button in the WPC or in the WestScript software to permanently save the set parameters in the module's non-volatile memory. In addition, you have the option of exporting a *.wpc file with the settings to your computer.

4 Technical description

4.1 Input and output signals

4.1.1 Connections

Connection	Supply
PIN 3	Power supply (see technical data)
PIN 4	0 V (GND) connection.
Connection	**Analogue signals**
PIN 9 (-) / 10 (+)	**Analogue differential input** -10...0...10 V or 4...20 mA, parameterisable
PIN 6, 13, 14	**Analogue inputs (unipolar)** 0-10 V or 4-20 mA, individually parameterisable
PIN 11	GND (analogue inputs and outputs)
PIN 12	10V reference voltage output
PIN 15, 16	**Analogue outputs** 0-10 V or 4-20 mA, individually parameterisable
Connection	**Digital inputs and outputs**
PIN 5, 7, 8	**Digital Inputs**
PIN 1, 2	**Digital Outputs**

4.1.2 Scaling and Limiting

Unipolar analogue inputs are scaled to 0 - 100.0 [%] for further processing in the script according to their range. Under- / overdriving is possible in the range -5% ... 105% depending on the signal type.

The bipolar input at PIN9/10 is read in the value range -100.0 ... 100.0, here too there is a +/-5% overdrive range.

The analogue outputs are controlled from the script with 0..100.0 [%], this is limited before output.

4.2 LED definitions

The functions of the LEDs are mainly determined by the script.

As standard with other W.E.St. modules, the green LED indicates readiness for operation (READY) by lighting up continuously or an error state (with active external enable) by flashing slowly.

This can be realised in the script by entering "OR READY ERFL" in the line LED_GN. The bit "ERFL" generates the flashing in case of an error.

Further functions of the LED, in addition to those connected by the script:

LEDs	Description of the LED function
GREEN + YELLOW A+B	1. **Chasing light (over all LEDs):** The bootloader is active. No normal functions are possible. 2. **All LEDs flash shortly every 6 s:** An internal data error was detected and corrected automatically! The module still works regularly. To acknowledge the error the module has to be cycle powered.
YELLOW A + YELLOW B	**Both yellow LEDs flash oppositely every 1 s:** The nonvolatile stored parameters are inconsistent! To acknowledge the error, the data have to be saved with the SAVE command or the corresponding button in the WPC.

4.3 Circuit diagram

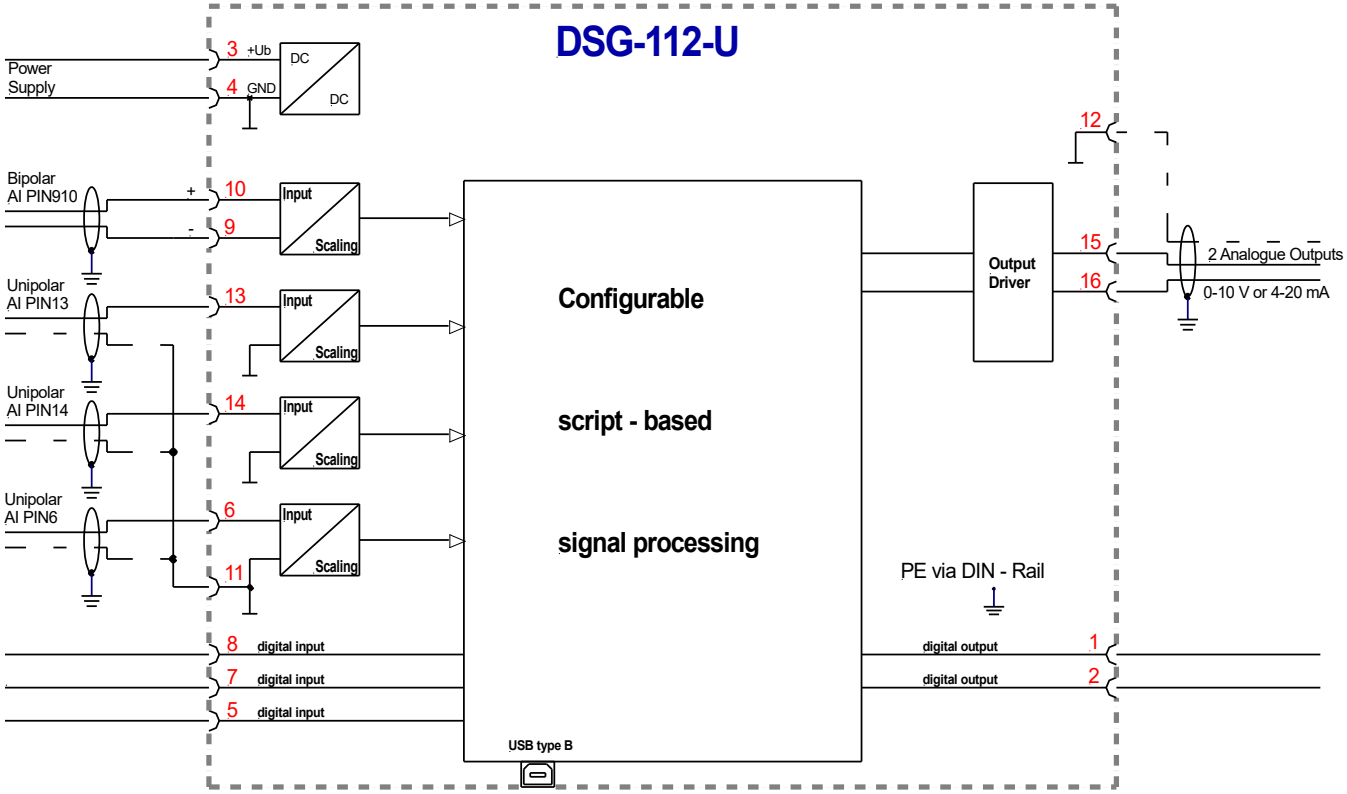

4.4 Typical wiring

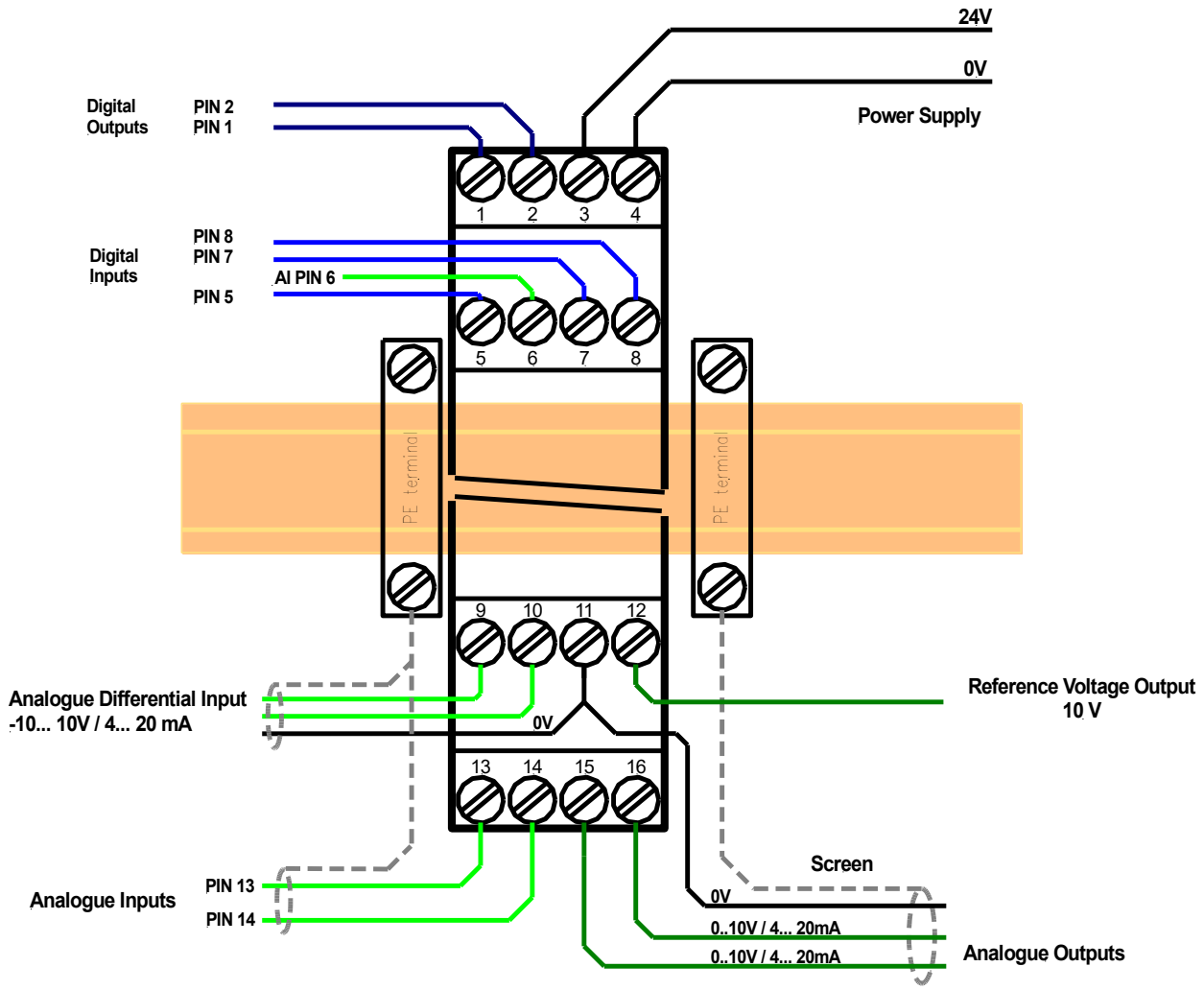

4.5 Connection examples

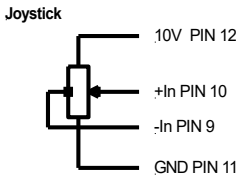

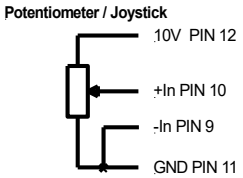

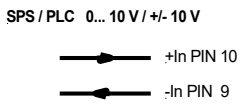

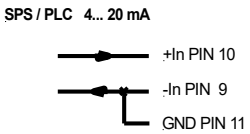

4.6 Technical data

Supply voltage (U_b) Power consumption External protection	**[VDC]** **[W]** **[A]**	12… 30 (incl. ripple) max. 1,2 1 medium time lag
Digital inputs OFF ON Input resistance	 **[V]** **[V]** **[kOhm]**	 OFF : < 2 ON : > 10 25
Digital outputs OFF ON Maximum output current	 **[V]** **[V]** **[mA]**	 OFF: < 2 ON: max. U_b 50
Analogue inputs Voltage Input resistance Signal resolution Current Burden Signal resolution	 **[V]** **[kOhm]** **[%]** **[mA]** **[Ohm]** **[%]**	Unipolar / differential 0… 10 / -10… 10 32 0,003 incl. Oversampling 4… 20 240 0,006 incl. Oversampling
Analogue outputs Voltage Maximum load Current Maximum load Signal resolution	 **[V]** **[mA]** **[mA]** **[Ohm]** **[%]**	 0… 10 10 4… 20 390 0,007
Controller sample time	**[ms]**	1
Serial interface Transmission rate	 **[kBaud]**	USB - virtual COM Port 9,6… 115,2
Housing Material Flammability class		Snap-on module to EN 50022 PA 6.6 polyamide V0 (UL94)
Weight	**[kg]**	0,15
Protection class Temperature range Storage temperature Humidity	**[IP]** **[°C]** **[°C]** **[%]**	IP20 -20… 60 -20… 70 < 95 (non-condensing)
Connections Communication Plug connectors PE		 USB type B 4 x 4-pole terminal blocks via the DIN mounting rail
EMC		EN 61000-6-2: 8/2005 EN 61000-6-4: 6/2007 + A1:2011

5 Parameters

5.1 Parameter overview

Group	Command	Default Value	Unit	Description
Basic Parameter				
	MODE	-	-	Parameter view
Common Settings (SYSTEM)				
	LG	EN	-	Language selection
	SENS	ON	-	Malfunction monitor
Free parameters for use in the script				
	PAR1.. PAR15	0	-	Free Parameters
Selection of the monitor signals				
	MON:A	0	-	M-Number of the signal SC:A
	MON:B	0	-	M-Number of the signal SC:B
	MON:C	0	-	M-Number of the signal SC:C
	MON:D	0	-	M-Number of the signal SC:D
Input / Output Signals (IO_CONF)				
Input signals				
	SIGNAL:6	U0-10	-	Type of input
	SIGNAL:910	U0+-10	-	Type of input
	SIGNAL:13	U0-10	-	Type of input
	SIGNAL:14	U0-10	-	Type of input
Output signals				
	SIGNAL:15	U0-10	-	Type and polarity of the output signal
	SIGNAL:16	U0-10	-	Type and polarity of the output signal
Predefined complex functions (COMPLEX)				
Curve characteriser				
	CCSET	X Y	-	Support points of a curve
Min / Max–Function[1]				
	MIN:A	0	0,01 %	MIN setting / overlap compensation A
	MIN:B	0	0,01 %	MIN setting / overlap compensation B
	MAX:A	10000	0,01 %	Output scaling A
	MAX:B	10000	0,01 %	Output scaling B
	TRIGGER	200	0,01 %	Trigger value of the MIN setting
	MMTYPE	JMP	-	Behaviour below MIN

[1] The P version provides two parameter sets for MIN/MAX, as more output channels can be used there. Accordingly, the parameters of the MIN/MAX functions are marked with an additional index, e.g. MIN_1:A / MIN_2:A.

4 Quadrant Ramp			
AA:1	100	ms	Ramp Times
AA:2	100	ms	
AA:3	100	ms	
AA:4	100	ms	
PI - Controller			
PID1:KP	100	0,01 %	Proportional Gain
PID1:TN	100	0,01 s	Integration Time
PID1:YR	10000	0,01	Feedback allowance

5.2 Basic parameters

5.2.1 MODE (Switching between parameter groups)

Command	Parameters	Unit	Group
MODE x	x= SYSTEM|IO_CONF| COMPLEX|ALL	-	**BASICS**

This command is changing the different parameter groups.

--- No group is displayed (default)
SYSTEM Common settings
IO_CONF Definition of the in- and output signals
COMPLEX Module-specific complex functions
ALL All parameters are visible

5.3 Common Settings

5.3.1 LG (language switching)

Command	Parameter	Unit	Group
LGx	x= DE|EN	-	**SYSTEM**

English or German can be selected for the help texts.

5.3.2 SENS (error monitoring)

Command	Parameter	Unit	Group
SENS x	x= ON|OFF|AUTO	-	**SYSTEM**

This command is used to activate or deactivate monitoring functions (4... 20 mA input, self-monitoring).

ON: All functions are monitored. The detected errors can be deleted by reactivating the ENABLE input (script signal!).

OFF: No monitoring function is active.

AUTO: AUTO RESET mode, all functions are monitored. After the error condition is no longer present, the module automatically switches to normal operating mode.

Normally, the monitoring function is always active, as otherwise no errors are signalled via the READY output. However, it can be deactivated for troubleshooting.

Special implementation of error monitoring in the context of script control:

In contrast to the permanently configured units, where the ENABLE input is connected to a physical PIN, this signal can be freely assigned here.

It is located in the output signal area, because it is an output of the script program that is used for internal further processing in error monitoring.

The error processing generates a signal READY, which in turn can be used in the script. From the script's point of view, READY is an input signal.

Attention! Without linking the READY via script commands, its state has no influence on the output signal formation, i.e. there is no switch-off in the event of an error.

5.3.3 PAR (free parameters)

Command	Parameter	Unit	Group
PAR:i x	i= 1... 15 x= -20000... 20000	0.01	**SYSTEM**

The parameters entered here are available for free use in the script. The setting can be made both by the WPC and the WestScript program.

5.3.4 MON (definition of the monitor signals)

Command	Parameter	Unit	Group
MON:i x	i= A, B, C, D x= 0... 40	-	**SYSTEM**

These parameters do not influence the function of the module, but merely select which M - signals can be observed in the monitor and oscilloscope of the WPC.

The value "0" as the basic setting does not correspond to a selection, since the M-numbers begin with "1". The corresponding SC value in the WPC monitor is then permanently displayed as "999.99".

5.4 Input and output configuration

5.4.1 SIGNAL (type of input and output signals)

Command	Parameter	Unit	Group
SIGNAL:6/:13/:14 SIGNAL:910 SIGNAL:15/:16	OFF|U0-10|I4-|20 U10-0|I20-4 OFF|U+-10|I4-12-20| U-+10|I20-12-4 U0-10|I4-20| U10-0|I20-4	-	**IO_CONF**

This command defines the type of input signals (current or voltage). At the same time, the signal direction can be reversed.

In OFF mode, the corresponding analogue input is deactivated.

5.5 Complex functions

These functions enable a more extensive calculation in one script line. They are typical functions that are often needed in control modules and power amplifiers. These functions are controlled by the parameters described here.

It should be noted that there is only one set of parameters per function, so it usually only makes sense to use each of these functions once in the script program.

A multiple call is theoretically possible for some functions if the same parameters can be worked with. Other functions may actually only be called once, because they work with state variables that are stored and processed further with the next call. This corresponds to the distinction between FC and FB in the area of PLC programming.

The value ranges of the functions are usually standardised:

100 % input or output signal is represented by a numerical value of "100.0".

Since the parameters in the fixed point format are given in 0.01 %, this corresponds to a parameter input of "10000".

5.5.1 CCSET (curve characteriser)

Command	Parameter	Unit	Group

`CCSET:I X Y`	`i= -10... 10`
	`x= -10000... 10000`
	`y= -10000... 10000`
		`-`
		`0.01 %`
		`0.01 %`
			COMPLEX

Here, a characteristic curve based on 21 pairs of values can be defined.

The X - axis corresponds to the input signal, the Y - axis to the output signal.

Restrictions on value entry:

- The X - coordinates must increase monotonously
- The X - coordinate of the first interpolation point is -10000, corresponding to -100.0 [%].
- The X - coordinate of the last interpolation point is 10000, corresponding to 100.0 [%].

The basic setting provides for a completely linear assignment with equidistant interpolation points:

Parameter

Name	Xpoint	Ypoint
CCSET:-10	-10000	-10000
CCSET:-9	-9000	-9000
CCSET:-8	-8000	-8000
CCSET:-7	-7000	-7000
CCSET:-6	-6000	-6000
CCSET:-5	-5000	-5000
CCSET:-4	-4000	-4000
CCSET:-3	-3000	-3000
CCSET:-2	-2000	-2000
CCSET:-1	-1000	-1000
CCSET:0	0	0
CCSET:1	1000	1000
CCSET:2	2000	2000
CCSET:3	3000	3000
CCSET:4	4000	4000
CCSET:5	5000	5000
CCSET:6	6000	6000
CCSET:7	7000	7000
CCSET:8	8000	8000
CCSET:9	9000	9000
CCSET:10	10000	10000

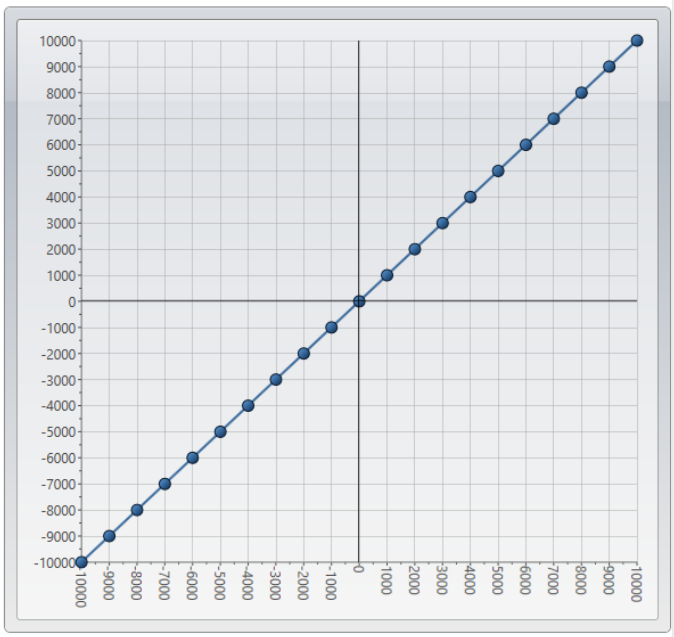

The output of the curve encoder is calculated using linear interpolation: **y=(x-x1)*(y1-y0)/(x1-x0)+y1.**

The input signal of the function is internally limited to the range of -100.0 [%] ... 100.0 [%] before processing in the curve encoder, so that no extrapolation takes place.

The effects of the linearisation can be assessed via the process data in the monitor or in the oscilloscope.

5.5.2 MIN/MAX (overlap compensation and scaling)

Command	Parameter	Unit	Group
	i= A|B	-	**COMPLEX**
MIN:ix	x= 0... 6000	0.01 %	
MAX:ix	x= 3000... 10000	0.01 %	
TRIGGER x	x= 0... 4000	0.01 %	
MMTYPE x	x= JMP|LIN	-	

These commands are used to adapt a signal, for example the output signal to the valve.

It is therefore also a linearisation function, but with simpler handling and less complexity.

The DSG-112-P module has two of these functions, the parameters are designated there as MIN_1:A... MIN_2:A, etc.

The MAX value sets the output signal (the maximum valve control). The MIN value compensates for the overlap (dead zone in the valve). The trigger defines when the MIN setting is active.

ATTENTION: If the MIN value is set too high, this will affect the minimum output current (minimum speed), which can then no longer be set.

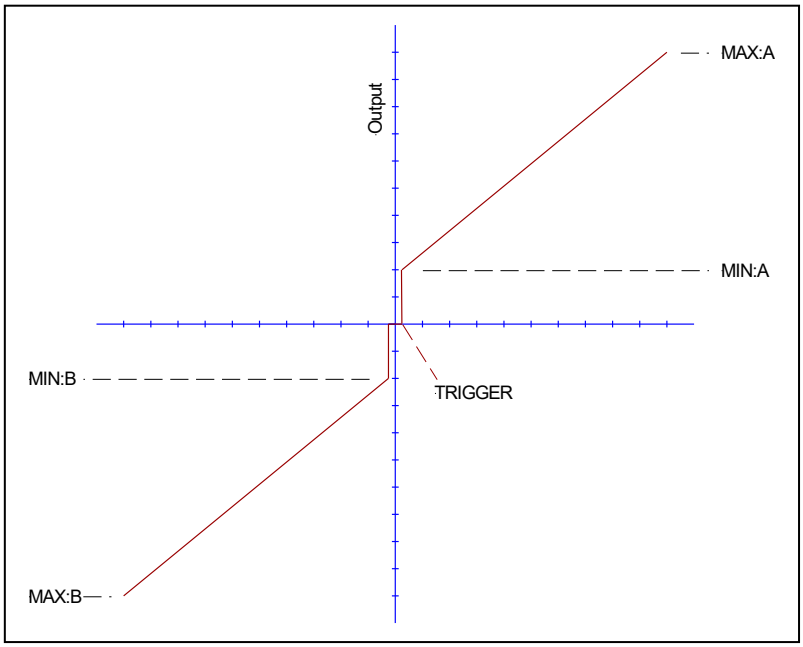

The parameter MMTYPE determines the behaviour when the absolute value of the input signal is smaller than TRIGGER, i.e. around zero. If you set this parameter to "JMP", the signal jumps to the respective MIN - value when reaching +/-TRIGGER, as shown here. In the "LIN" setting, linear interpolation takes place. The JMP setting is primarily used for power amplifiers, the LIN setting for control functions.

5.5.3 4 - Quadrant ramp

Command	Parameter	Unit	Group
AA: IX	i= 1... 4 x= 1... 120000	 ms	**STD**

Four quadrant ramp function.

The first quadrant represents the rising ramp with a positive output, the second quadrant represents the falling ramp as long as the output is positive. The third quadrant stands for the falling ramp with negative output (rising absolute value) and the fourth quadrant for the rising ramp with negative output:

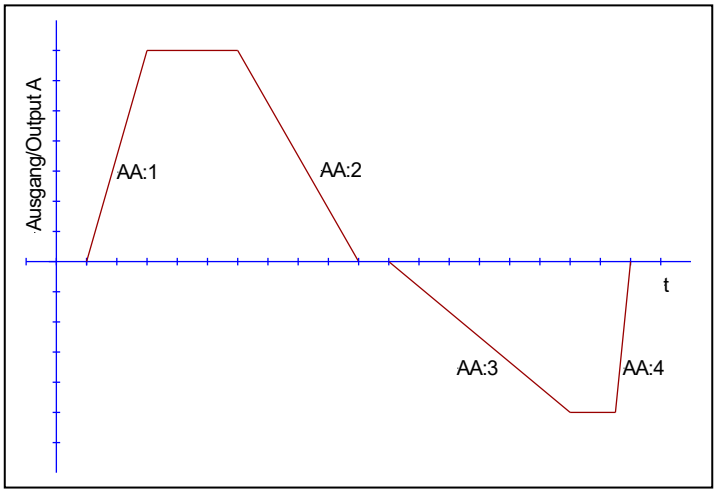

The maximum change of the output is determined from the entered times to

dy/dt = +/- 100.0 / AA:I, i.e. the times indicate the time for 100% - change of the output signal.

5.5.4 PI - Controller

Command	Parameter	Unit	Group
PID1:KP x PID1:TN x PID1:YR x	x= +/- 100000 x= 0... 100000 x= 0... 10000	0.01 0.01 s 0.01	**STD**

These parameters can be used to set up a universal PI controller, adjustable within wide limits, with optional external feedback.

TN = 0 switches off the integral part.

With YR, a so-called feedback allowance is determined: The output signal of the controller and the included integrator are limited so that they lie within a band +/- YR around the feedback value.

If the feedback value is fixed at 50% and YR is set to "5000", this results in a limitation of the output signal to 0...100%.

Setting the feedback value to 0% and setting YR to "10000" results in limiting the output signal to +/- 100%.

In case of further signal influence on the output or external limitations, the correspondingly adjusted signal should be fed back.

5.6 Special Commands

These commands are only accessible via the terminal:

5.6.1 DIAG (query of the last shutdown causes)

If this command is entered in the terminal window, the last 10 shutdowns (disappearance of *READY* with *ENABLE* applied) are displayed. However, the shutdown causes are not saved when the supply voltage is switched off. The last cause is displayed in the bottom line of the list. Entries "---" indicate unused memory cells.

Finally, a special error code of the unit's internal self-diagnosis is output ("System Faillure State"). A value of "0" indicates that there are currently no system errors.

Example:

```
>DIAG
---
---
---
---
---
---
---
---
INPUT PIN 13
INPUT PIN 14
System Faillure State:
0
>
```

5.6.2 SC:CLEAR

This command resets the script to the factory setting and thus deletes individual programming. Please note that after power recovery, the last state saved via "SAVE" is still present, i.e. not only the parameters but also the script are read back from the EEPROM of the unit.

5.6.3 SC:LIST

Outputs the current script in the terminal window. Only the lines with content are displayed.

Example:

```
>SC:LIST
PIN15   DIR     PIN13   -       -
PIN16   DIR     PIN14   -       -
LED_GN  OR      READY   ERFL    -
EN_SIG  DIR     PIN8    -       -
>
```

This corresponds to the basic configuration of the module established via "SC:CLEAR".

5.6.4 SC:I

Manual input option of script lines.

If you want to make minor changes without the "WestScript" software, you can use this command in the terminal window.

Handling:

Enter the command SC:I, followed by a space, then specify the line to be defined, followed by an equal sign, function, then the parameters, these separated by spaces.

Example:

```
>SC:I M1=ADD PIN13 PIN14
```

5.7 PROCESS DATA (Monitoring)

5.7.1 Displayed values

Command	Parameter	Unit
PIN6	Input signal at PIN6	%
PIN13	Input signal at PIN6	%
PIN14	Input signal at PIN6	%
PIN9/10	Input signal at PIN6	%
PIN15	Output signal to PIN15	%
PIN16	Output signal to PIN16	%
DT	Processing time of the script program	µs
SC:A	M - Signal defined by the user	%
SC:B	M - Signal defined by the user	%
SC:C	M - Signal defined by the user	%
SC:D	M - Signal defined by the user	%

The process data are the variable variables that can be continuously observed in the monitor or oscilloscope of the WPC.

The signal "DT" indicates, for information only, the current processing time of the script program. From the unity it can be seen at what speed this is performed. The numerical value can fluctuate slightly and also depends on the number and type of commands in the script table. Since a new call is made every 1000 µs = 1 ms, the processing time should be less than 500 µs, but this is completely uncritical due to the very efficient processing.

5.7.2 RC - Mode

As with other W.E.St. units, there is the possibility of so-called RC operation. This is the remote control of certain functions via the WPC software.

In the case of modules with a fixed program structure, in RC mode only those input signals are replaced by simulation values with which the setpoints or other commands of the higher-level control are transmitted. The purpose of this is to be able to put the control into operation autonomously.

With this unit, the function of the script determines which input signals represent setpoints and which represent actual values. It is therefore not possible to make a meaningful distinction between the signals in advance. Also, there is no point in simulating all inputs, as in this case no open or closed-loop control function of a real machine would be possible any more. For these reasons, RC operation has a different purpose with this unit, namely the possibility of freely setting output signals.

This function is especially useful for testing the connected hardware without operating the machine. When RC mode is activated, the outputs (analogue and digital) are set directly from the WPC operating screen:

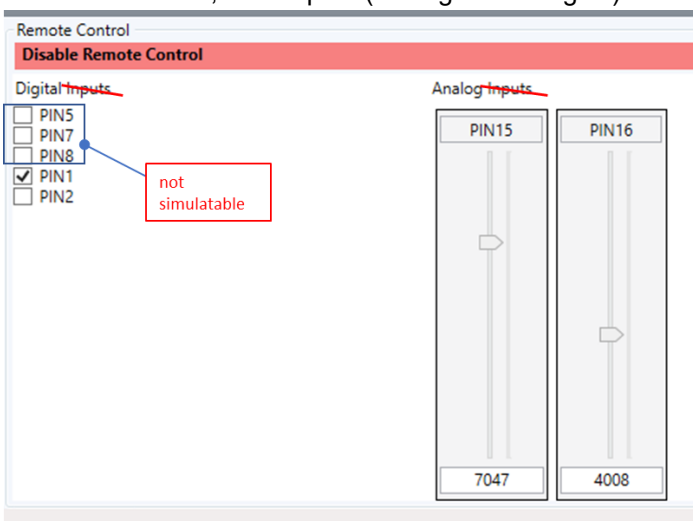

This picture shows the activated RC function in the monitor window of the WPC. The input pins 5/7/8 cannot be simulated and are overwritten with the current input value even if simulation is running.

6 Script

The general procedure for creating a script as well as the language reference can be found in the instructions "Script Language Documentation". The module-specific features are described here.

6.1 Input and output signals for the script

The following table shows the input signals available in the script and their connection to the periphery:

Input signal script	Meaning	Value range
PIN6	Analogue input at PIN 6, 0...10V or 4...20 mA	-5.0 (0.0) … 105.0[2]
PIN910	Analogue differential input at PIN 9/10, -10...0...10V or 4...12...20 mA	-105.0 ...0.0 ... 105.0
PIN13	Analogue input at PIN 13, 0...10V or 4...20 mA	-5.0 (0.0) … 105.0
PIN14	Analogue input at PIN 14, 0...10V or 4...20 mA	-5.0 (0.0) … 105.0
PIN7	Digital input at PIN 7	0.0 or 1.0
PIN8	Digital input at PIN 8	0.0 or 1.0
PIN5	Digital input at PIN 5	0.0 or 1.0
READY	Ready for operation (output of the error processing)	0.0 or 1.0
ERFL	Flashing signal in the "Error & ENABLE active" state	0.0 or 1.0

The output signals are set as follows:

Output signal script	Meaning	Value range
PIN15	Analogue output at PIN15 , 0...10V or 4...20 mA	0.0 ... 100.0
PIN16	Analogue output at PIN 16, 0...10V or 4...20 mA	0.0 ... 100.0
PIN1	Switching output at PIN 1	On: value >= 1.0
PIN2	Switching output at PIN 2	On: value >= 1.0
LED_GN	Green LED on the front of the module	On: value >= 1.0
LED_YM	Middle yellow LED on the front of the module	On: value >= 1.0
LED_YR	Right yellow LED on the front of the module	On: value >= 1.0
EN_SIG	External ENABLE to the error processing	On: value >= 1.0
SNAP	Snapshot of the script variables upon edge	On: value >= 1.0

[2] Cf. notes in chapter 4.1.2

6.2 Standard Script

In the delivery state, or if the module is reset to this state via "DEFAULT" or "SC:CLEAR", the script is reset to a very simple function:

```
PIN15   DIR     PIN13   -       -
PIN16   DIR     PIN14   -       -
LED_GN  OR      READY   ERFL    -
EN_SIG  DIR     PIN8    -       -
```

This causes the direct output of the signal at PIN13 and PIN14 to the outputs and activation of the error processing with display via the green LED.

6.3 Handling of the integrated complex functions

In addition to the parameterisation of these functions, which was explained in chapter 5, the use of the associated operands is also important:

Complex functions				
		Operand 1	**Operand 2**	**Operand 3**
CC	Characteristic Curve	Input value	-	-
MINMAX	Min - Max function	Input value	-	-
PI	universal controller	Control deviation	Feedback value	Tracking
RAMP4Q	4 - Quadrant ramp	Input value	Switch off	Reset

6.3.1 PI-Controller

Use without external feedback and without tracking:

Set operand 2 to a fixed value and set parameter YR large enough.

Set operand 3 fixed to "0.0" or do not connect.

Tracking (operand 3): A logical "1" signal (operand is >= 1.0) causes the controller output to be set equal to the feedback value.

6.3.2 4-Quadrant ramp

Switching off the ramp by a value >= 1.0 at operand 2 causes the input value to be immediately transferred to the output. If operand 2 is then < 1.0 again, the ramp is started from the current output value.

Resetting the ramp by a value >= 1.0 at operand 3 causes the output of the ramp to be set to the value "0.0" and to restart from there when released again.

7 Appendix

7.1 Failure monitoring

The following possible error sources are continuously monitored when SENS = ON/AUTO:

Source	Error	Behaviour
Analogue input pins, set to current signal	Not in valid range or cable break	READY = 0 Further processing in the script
P-VERSION Activated Channels	Cable break or incorrect wiring	READY = 0 Further processing in the script
EEPROM (when switching on)	Data error	READY is deactivated. The signal can only be activated by saving the parameters again!

Attention: When creating the script, the READY signal must be connected accordingly!

8 ADDITIONAL INFORMATION: Power output stage

8.1 General function

The power output stages have been developed for controlling proportional valves without spool position feedback. The output stage is controlled by the microcontroller on the basic module by means of pulse width modulated signals, and the current is continuously controlled. The cycle time for the controller is 0,125 ms.

The output stage can be ideally adjusted to dynamic requirements via internal parameters.

Valve technology: Proportional valves manufactured by REXROTH, BOSCH, DENISON, EATON, PARKER, FLUID TEAM, ATOS and others.

Features

- **Two independent power output stages for 0.5 to 2.6 A, one of which can be used for two directions**
- **Hardware short-circuit protection with 3 µs response time**
- **Adjustable PWM frequency, dither frequency and dither amplitude**
- **High current signal resolution**
- **No additional delay times between the control function and the power stage**
- **Separate power supply for safety-relevant applications**
- **Integrated into the standard controller, no additional wiring necessary**

8.2 Device description

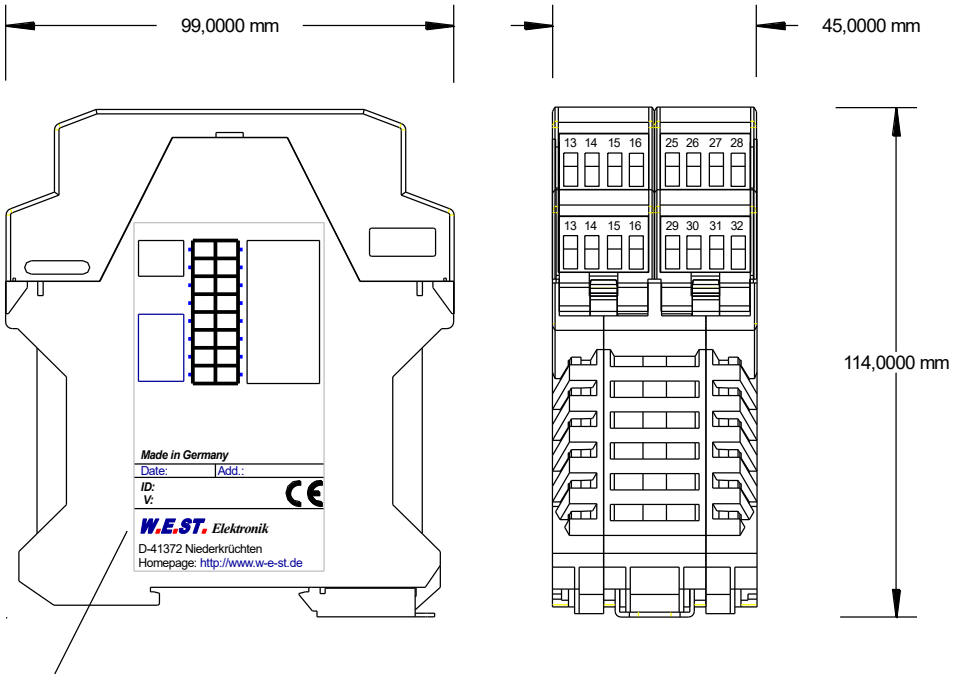

Typenschild und Anschlussbelegung
Type plate and terminal pin assignment

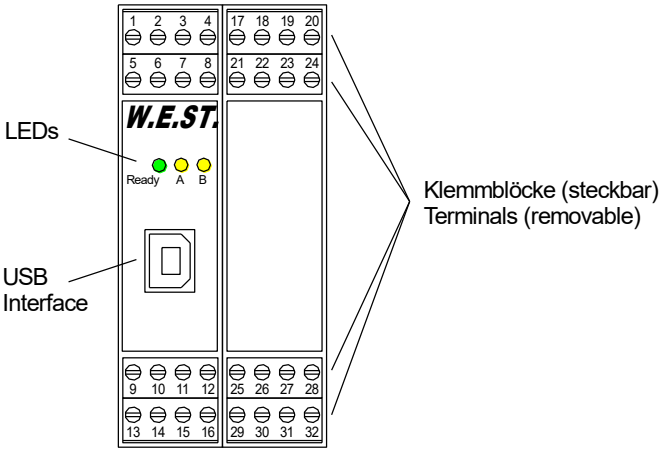

8.3 Inputs and outputs

Connection	Signal description
PIN 22 + PIN 24 -	**Power supply: 10… 30 VDC:** For safety-related applications, the output stage can be deactivated thanks to the separate power supply inputs.
PIN 17+19	Solenoid current output A
PIN 18+20	Solenoid current output B1
PIN 21+23	Solenoid current output B2
Connection	**Additional signals (DI / AI)**
PIN 25	Digital input PIN25
PIN 26	Digital input PIN26
PIN 29	Analog input PIN29 (+) 0-10V
PIN 30	Reference potential (-) for analogue input at PIN29
PIN 31	Analogue signal - ground

8.4 Circuit diagram

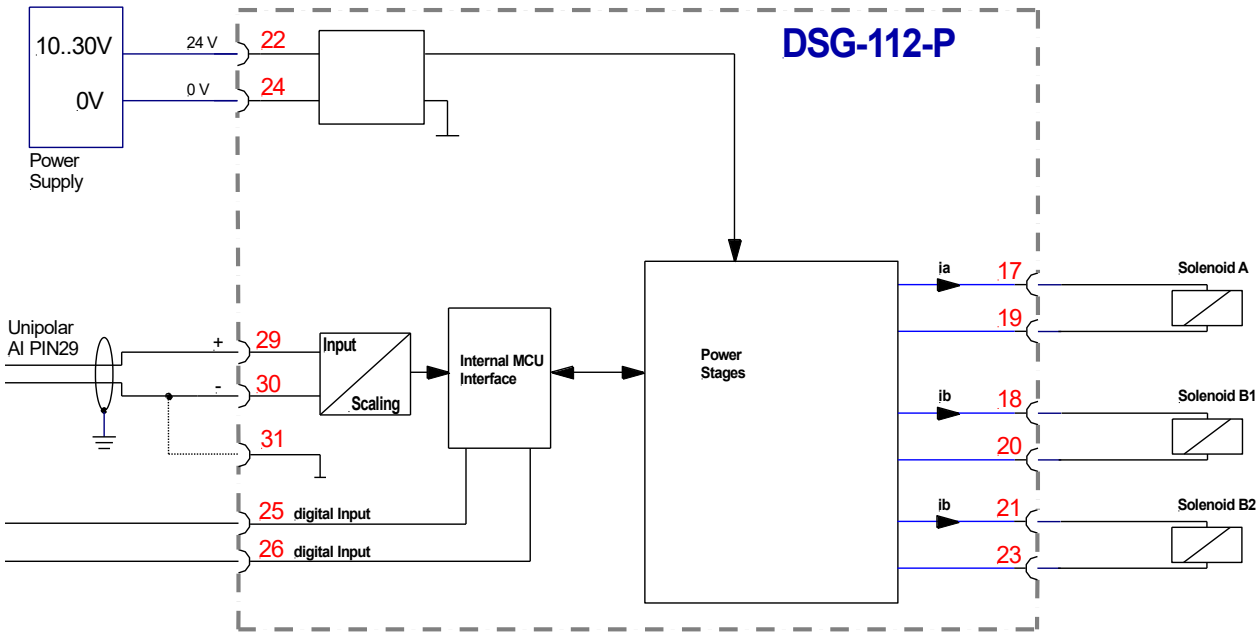

8.5 Typical wiring

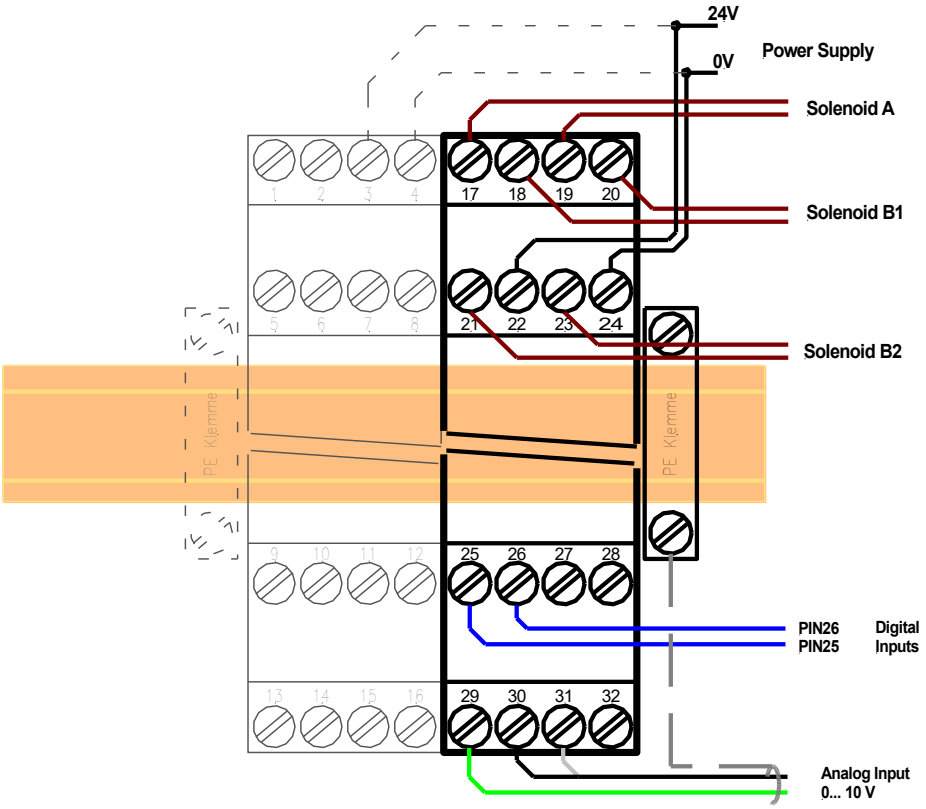

CAUTION: The solenoid cables should be screened due to electro-magnetic emissions.

CAUTION: plugs with free-wheeling diodes and LED indicators cannot be used with current-controlled power outputs. They interfere with the current control and can destroy the output stage.

8.6 Technical data

Supply voltage Power consumption max. Fuse protection	**[VDC]** **[W]** **[A]**	10... 30 60 (depending on the solenoid) 3 (medium time lag)
PWM output PWM frequency	**[A]** **[Hz]**	0,5, to 2,6 (step less selectable); broken wire and short circuit monitored 61… 2604
Sample time solenoid current control	**[ms]**	0,125
Temperature range	**[°C]**	-20… 60
Housing		Snap-on module EN 50022 Polyamide PA 6.6 Flammability class V0 (UL94)
Weight	**[kg]**	0,250 (incl. standard module)
Connections		3 x 4-pole terminal blocks

8.7 Parameters of the power stage

Command	Default	Unit	Description
CURRENT:A	1000	mA	Rated solenoid current
DFREQ:A	121	Hz	Dither frequency
DAMPL:A	500	0.01 %	Dither amplitude
PWM:A	2604	Hz	PWM frequency
ACC:A	ON	-	Current loop auto adjustment
PPWM:A **IPWM:A**	7 40	- -	Manual PI-adjustment of the current loop
CURRENT:B	1000	mA	Rated solenoid current
DFREQ:B	121	Hz	Dither frequency
DAMPL:B	500	0.01 %	Dither amplitude
PWM:B	2604	Hz	PWM frequency
ACC:B	ON	-	Current loop auto adjustment
PPWM:B **IPWM:B**	7 40	- -	Manual PI-adjustment of the current loop

The correct setting of the nominal coil current (CURRENT) is particularly important.

The standard parameterization of the other values has been used with a large number of proportional vales from various manufacturers. This parameterization has proved to be good as long as no special demands concerning the application have to be fulfilled.

The unit is equipped with two channels A and B, whereby B can be controlled bipolarly and thus activates two coils alternately. The settings of channels A and B are independent of each other, but the two coils at B1 and B2 are linked, i.e. the same settings apply here.

If you want to control a directional control valve, channel B suggests itself.

8.7.1 CURRENT (Rated solenoid current)

Command	Parameters	Unit	Group
CURRENT:A/:B x	x= 500… 2600	mA	**IO_CONF**

The nominal current of the solenoid is set with this parameter. Dither and also MIN/MAX always refer to this value.

8.7.2 DFREQ (Dither frequency)

8.7.3 DAMPL (Dither amplitude)

Command	Parameters	Unit	Group
DFREQ:A/:B x DAMPL:A/:B x	x= 60… 400 x= 0… 3000	Hz 0,01 %	**IO_CONF**

The dither[3] can be defined with this commands. Different amplitudes or frequencies may be required depending on the valve. The dither amplitude is defined in % (peak to peak value) of the nominal output current[4] (see: CURRENT command).

The dither frequency is defined in Hz. Depending on the internal calculations, the frequency is adjustable in steps only (the next higher value will be selected)[5].

CAUTION: *The PPWM and IPWM parameters influence the effect of the dither setting. These parameters should not be altered again after the dither has been optimized.*

CAUTION*: If the PWM frequency is less than 500 Hz, the dither amplitude DAMPL should be set to zero.*

8.7.4 PWM (PWM frequency)

Command	Parameter	Unit	Group
PWM x	x= 61… 2604	Hz	**IO_CONF**

The frequency can be changed in defined steps (61 Hz, 72 Hz, 85 Hz, 100 Hz, 120 Hz, 150 Hz, 200 Hz, 269 Hz, 372 Hz, 488 Hz, 624 Hz, 781 Hz, 976 Hz, 1201 Hz, 1420 Hz, 1562 Hz, 1736 Hz, 1953 Hz, 2232 Hz and 2604 Hz). The optimum frequency depends on the valve.

Attention: *The PPWM and IPWM parameters should be adapted when using low PWM frequencies because of the longer dead times which forces a reduced stability of the closed loop control.*

[3] The dither is a ripple signal which is superimposed on the current set point and is defined by the amplitude and frequency: the dither frequency and the PWM frequency. The dither frequency should not be confused with the PWM frequency. In some documentations the PWM frequency is described as a dither. This can be recognized by the lack of the dither amplitude.

[4] The dither amplitude is a command signal. Derivations between the commanded amplitude and the real amplitude are possible, depending on the dynamic of the solenoid.

[5] The lower the dither frequency, the smaller the steps. Therefore no practical problems are expected.

8.7.5 ACC (Current loop auto adjustment)

Command	Parameter	Unit	Group
ACC:A/:B X	x= ON|OFF	-	**IO_CONF**

Operation mode of the closed loop current control.

ON: AUTOMATIC mode: PPWM and IPWM are calculated depending on the preset PWM-frequency.
OFF: Manual adjustment: PPWM and IPWM can be adjusted manually.

8.7.6 PPWM (P gain of the current loop)

8.7.7 IPWM (I gain of the current loop)

Command	Parameters	Unit	Group
PPWM x IPWM x	x= 0… 30 x= 4… 100	- -	**IO_CONF,** **ACC = OFF**

The PI current controller for the solenoids is parameterized with these commands.

CAUTION: These parameters should not be changed without adequate measurement facilities and experience.

Attention, if the parameter ACC is set to ON, these adjustments are done automatically.

If the PWM frequency is < 250 Hz, the dynamic of the current controller has to be decreased.
Typical values are: PPWM = 1… 3 and IPWM = 40… 80.

If the PWM frequency is > 1000 Hz, the default values of PPWM = 7 and IPWM = 40 should be chosen.

8.8 Additional input and output signals for the script

The following table shows the additional input signals available with the -P version and their connection to the periphery:

Input signal script	Meaning	Value range
PIN29	Analog input at PIN 29, 0…10V	0,0 … 105,0
PIN25	Switching input at PIN 25	0,0 or 1,0
PIN25	Switching input at PIN 26	0,0 or 1,0

The additional output signals are defined as follows:

Output signal script	Meaning	Value range
SOL_A	Control value of the output stage channel A	0,0 … 100,0
SOL_B	Control value of the output stage channel B	-100,0 … 0,0 … 100,0
PWA	Enable output stage channel A	On: value >= 1,0
PWB1	Enable output stage channel B1	On: value >= 1,0
PWB2	Enable output stage channel B1	On: value >= 1,0

Control of the solenoid outputs:

It is necessary to enable the relevant channel via the logic signal PW... and to control it by means of the analogue setpoint via SOL.... 100.0 corresponds to the nominal current specified for CURRENT; there is no override. It is advisable to link the release of the desired channels with the "RDY" signal. Channel B can be controlled bipolarly, a negative signal acts on output B2 (PIN 21/23). As soon as a channel is controlled via enable and corresponding setpoint specification, the output is monitored for wire break. If an output is to remain open, it must not be enabled, as a detected wire break leads to an error switch-off (RDY changes to "0").

8.9 Process data of the power stage

Command	Parameter	Unit
IA	Output current channel A	mA
IB1	Output current channel B1	mA
IB2	Output current channel B2	mA

8.10 Standard Script

The standard script of the P - version additionally represents the function of a simple power amplifier for directional control valves with connection to channel B1/B1. The yellow LEDs indicate the control direction of the setpoint:

```
PIN15   DIR     PIN13   -       -
PIN16   DIR     PIN14   -       -
SOL_B   MINMAX1 PIN910  -       -
LED_GN  OR      READY   ERFL    -
LED_YM  GT      SOL_B   0.0     -
LED_YR  LT      SOL_B   0.0     -
PWB1    DIR     READY   -       -
PWB2    DIR     READY   -       -
EN_SIG  DIR     PIN8    -       -
```

9 Notes